V1.2 2025-12-01

Commercial & Industrial Grid-tied Inverter

GT G1 100-150kW

- **GW100K-GT-L-G10**
- **GW150K-GT-G10**

User Manual

GOODWE

Copyright Statement

Copyright©GoodWe Technologies Co., Ltd. 2025. All rights reserved.
No part of this manual can be reproduced or transmitted to the public platform in any form or by any means without the prior written authorization of GoodWe Technologies Co., Ltd.

Trademarks Authorization

GOODWEand other GoodWe trademarks are trademarks of GoodWe Company. All other trademarks or registered trademarks mentioned in this brochure are the property of their respective owners.

Notice

The information in this user manual is subject to change due to product updates or other reasons. This guide cannot replace the product labels otherwise specified. All descriptions in the manual are for guidance only.

Table of Contents

1 About This Manual 5
1.1 Applicable Products 5
1.2 Target Audience 5
1.3 Symbol Definition 5
2 Safety Precautions 7
2.1 General Safety 7
2.2 DC Side 7
2.3 AC Side 8
2.4 Inverter 9
2.5 European Conformity Declaration 10
2.5.1 Devices with Wireless Communication Function 10
2.5.2 Equipment without Wireless Communication Modules 10
2.6 Personal Requirements 10
3 Product Introduction 12
3.1 Introduction 12
3.2 Circuit Diagram 12
3.3 Supported Grid Types 13
3.4 Appearance Description 13
3.4.1 Appearance Description 13
3.4.2 Dimensions 15
3.4.3 Indicator Description 15

3.4.4 Nameplate Description 16
3.5 Functional Features 17
3.6 Operation Mode of Inverters 19
4 Equipment Inspection and Storage 21
4.1 Equipment Inspection 21
4.2 Deliverables 21
4.3 Equipment Storage 22
5 Installation 24
5.1 Installation Requirements 24
5.2 Inverter Installation 26
5.2.1 Inverter Handling 26
5.2.2 Inverter Installation 27
6 Electrical Connections 29
6.1 Safety Precautions 29
6.2 Connecting the PE Cable 30
6.3 Connecting the AC Output Cable 31
6.4 Connecting the DC Input Cable 34
6.5 Communication Connection 38
6.5.1 RS485 Communication Networking 38
6.5.2 Power Limit and Load Monitoring 39
6.5.3 Connect the Communication Cable 43
7 Equipment Commissioning 47

7.1 Check Before Power On 47
7.2 Equipment Power On 47
8 System Commissioning 49
8.1 Setting Inverter Parameters via App 49
8.2 Monitoring via SEMS Portal 49
9 System Maintenance 50
9.1 Power Off the Inverter 50
9.2 Removing the Inverter 50
9.3 Disposing of the Inverter 51
9.4 Troubleshooting 51
9.5 Routine Maintenance 63
10 Technical Parameters 66
11 Explanation of Terms 72
12 Obtaining of Relevant Manuals 74
13 Contact Details 75

1 About This Manual

This document describes the product information, installation, electrical connection, commissioning, troubleshooting, and maintenance of the inverter. Read through this manual before installing and operating the products to understand product safety information and familiarize yourself with functions and features of the product. This manual is subject to update without notice. For more product details and latest documents, visit https://en.goodwe.com/.

1.1 Applicable Model

This manual applies to the listed inverters below:

No.	Nominal Output Power	Nominal Output Voltage
GW150K-GT-G10	150kW	220/380V, 3L/N/PE or 3L/PE (China)
		220/380, 230/400, 240/415, 277/480V, 3L/N/PE or 3L/PE (Overseas)
GW100K-GT-L-G10	100kW	127/220V, 133/230V, 3L/N/PE or 3L/PE

1.2 Target Audience

Only for use by professionals who are familiar with local regulations and standards, electrical systems, and who have received professional training and are knowledgeable about this product.

1.3 Symbol Definition

To make better use of this manual, the following symbols are used to highlight important information. Please read the symbols and explanations carefully.

⚠DANGER
A situation with high potential danger, which will result in death or serious injury if not avoided.
⚠WARNING
A situation with moderate potential danger, which may result in death or serious injury if not avoided.
⚠CAUTION
A situation with low potential danger, which may result in moderate or minor injury to personnel if not avoided.
NOTICE
Highlighted information and supplements of the texts. Or some skills and methods to solve product-related problems to save time.

2 Safety Precautions

⚠WARNING
The products are designed and tested strictly to comply with related safety rules. Follow all the safety instructions and cautions before any operations. Improper operation might cause personal injury or property damage as the products are electrical equipment.

2.1 General Safety

NOTICE
• The information in this user manual is subject to change due to product updates or other reasons. This manual cannot replace the product safety labels unless otherwise specified. All descriptions in the manual are for guidance only. • Before installations, read through the user manual to learn about the product and the precautions. • All operations should be performed by trained and knowledgeable technicians who are familiar with local standards and safety regulations. • Use insulating tools and wear personal protective equipment(PPE) when operating the equipment to ensure personal safety. Wear anti-static gloves, wrist strips, and cloths when touching electronic devices to protect the equipment from damage. • Unauthorized dismantling or modification may damage the equipment, and the damage is not covered under the warranty. • Strictly follow the installation, operation, and configuration instructions in this manual or the user manual. The manufacturer shall not be liable for equipment damage or personal injury if you do not follow the instructions. For more warranty details, please visit https://www.goodwe.com/warrantyrelated.html.

2.2 DC Side

⚠DANGER

- Connect the inverter DC cables using the delivered DC connectors. The manufacturer shall not be liable for the equipment damage if DC connectors of other models are used.
- Confirm the following information before connecting the PV string to the inverter. Otherwise, the inverter may be damaged permanently or even cause fire and cause personal and property losses. Damage and injury caused by failure to operate in accordance with the requirements of this document or the corresponding user manual are not covered by the warranty.
  - Make sure that the positive pole of the PV string connects to the PV+ of the inverter. And the negative pole of the PV string connects to the PV- of the inverter.
  - Make sure that the open circuit voltage of the PV string connected to each MPPT shall not exceed Max. Input Voltage. When the input voltage ranges from 1000 to 1100V, inverter is in standby mode. When the input voltage returns to 180 to 1000V, the inverter will resume normal operating state.

⚠WARNING

- Ensure the PV Module frames and the bracket system are securely grounded.
- Ensure the DC cables are connected tightly, securely and correctly.
- PV modules used with inverters must comply with IEC61730 Class A standard.
- The PV String connected to the same MPPT must use the same model and the same number of PV modules.
- To maximize the Inverter power efficiency generation, ensure that the maximum power point voltage of the series-connected PV modules falls within the MPPT voltage range at nominal power range of the Inverter.
- Ensure that the voltage difference between different MPPT channels is less than or equal to 150V.
- Ensure that the input current of each MPPT is less than or equal to Max. Input Current per MPPT of inverter, referring to the Technical Data.
- When there are multiple PV strings, it is recommended to maximize the connections of MPPTs.

2.3 AC Side

⚠WARNING

- The voltage and frequency at the connecting point should meet the on-grid requirements.
- Additional protective devices like circuit breakers or fuses are recommended on the AC side. Specification of the protective device should be at least 1.25 times the rated AC output rated current.
- You are recommended to use copper cables as PE cables. If you prefer aluminum cables, remember to use copper to aluminum adapter terminals.

2.4 Inverter

⚠DANGER

- Do not apply mechanical load to bottom terminals, otherwise the terminals may be damaged.
- All labels and warning marks should be visible after the installation. Do not cover, scrawl, or damage any label on the equipment.
- The warning labels on the inverter enclosure are as follows:

No.	Symbol	Description
1		Potential risks exist during the operation of the devices. Wear proper PPE during operations.
2		High voltage hazard. High voltage exist during the operation of the devices. Disconnect all incoming power and turn off the product before working on it.
3		High-temperature hazard. Do not touch the product under operation to avoid being burnt.
4		Delayed discharge. Wait 5 minutes after power off until the components are completely discharged.
5		Read through the user manual before any operations.

6		Do not dispose of the System as household waste. Deal with it in compliance with local laws and regulations, or send it back to the manufacturer.
7		Grounding point of PE cables.
8		CE Mark.

2.5 EU Declaration of Conformity

2.5.1 Equipment with Wireless Communication Modules

The equipment with wireless communication modules sold in the European market meets the requirements of the following directives:

- Radio Equipmt Directive 2014/53/EU (RED)
- Restrictions of Hazardous Substances Directive 2011/65/EU and (EU) 2015/863 (RoHS)
- Waste Electrical and Electronic Equipmt 2012/19/EU
- Registration, Evaluation, Authorization and Restriction of Chemicals (EC) No 1907/2006 (REACH)

2.5.2 Equipment without Wireless Communication Modules

The equipment without wireless communication modules sold in the European market meets the requirements of the following directives:

- Electromagnetic compatibility Directive 2014/30/EU (EMC)
- Electrical Apparatus Low Voltage Directive 2014/35/EU (LVD)
- Restrictions of Hazardous Substances Directive 2011/65/EU and (EU) 2015/863 (RoHS)
- Waste Electrical and Electronic Equipmt 2012/19/EU
- Registration, Evaluation, Authorization and Restriction of Chemicals (EC) No 1907/2006 (REACH)

2.6 Personal Requirements

NOTICE
• Personnel who install or maintain the equipment must be strictly trained, learn about safety precautions and correct operations. • Only qualified professionals or trained personnel are allowed to install, operate, maintain, and replace the equipment or parts.

3 Product Introduction

3.1 Application Scenario

The GT inverter is a three-phase PV string grid-tied inverter. The inverter converts the DC power generated by the PV module into AC power and feeds it into the utility grid. The intended use of the inverter is as follows:

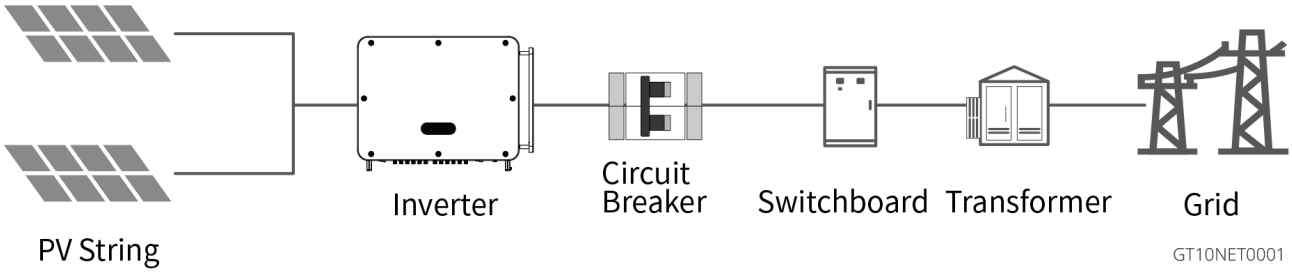

Model Description

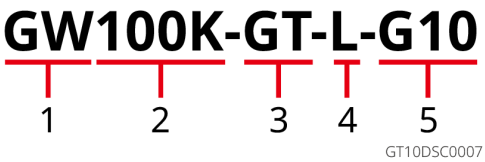

No.	Description	Instruction
1	Brand Code	GW: GoodWe
2	Nominal Power	150K: the nominal power is 150kW
3	Series Name	GT: GT Series
4	Grid Type	L: Low Voltage Grid
5	Version Code	G10: The first-generation product

3.2 Circuit Diagram

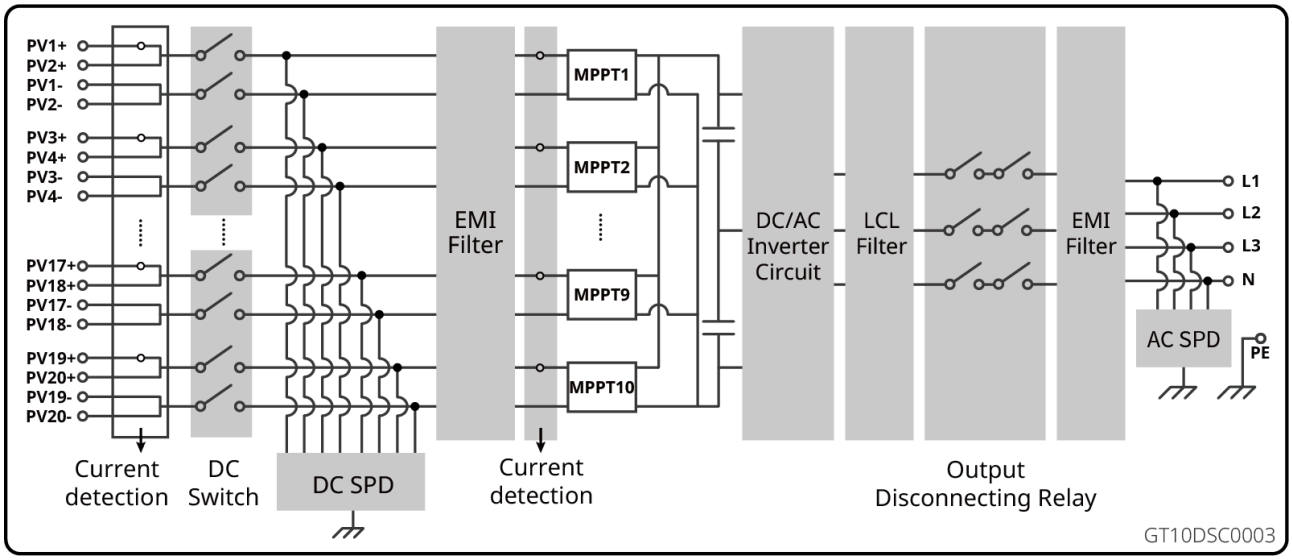

3.3 Supported Grid Types

NOTICE
For the TT grid type with neutral wire, the N to ground voltage must be less than 20V.

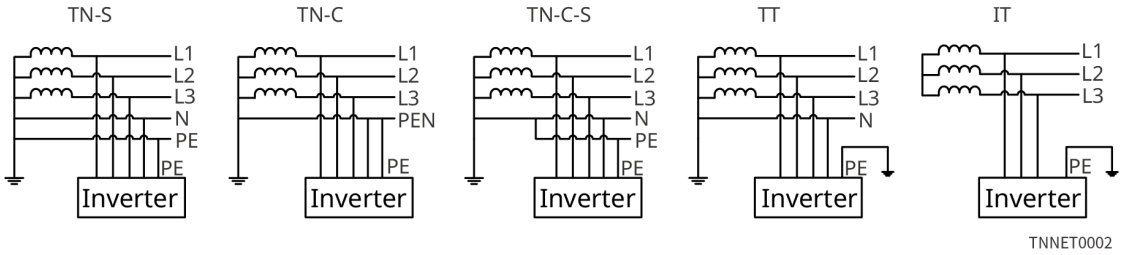

3.4 Appearance&Dimensions

There may be differences in the appearance and color of the product, and it refer to the actual situation.

3.4.1 Appearance Description

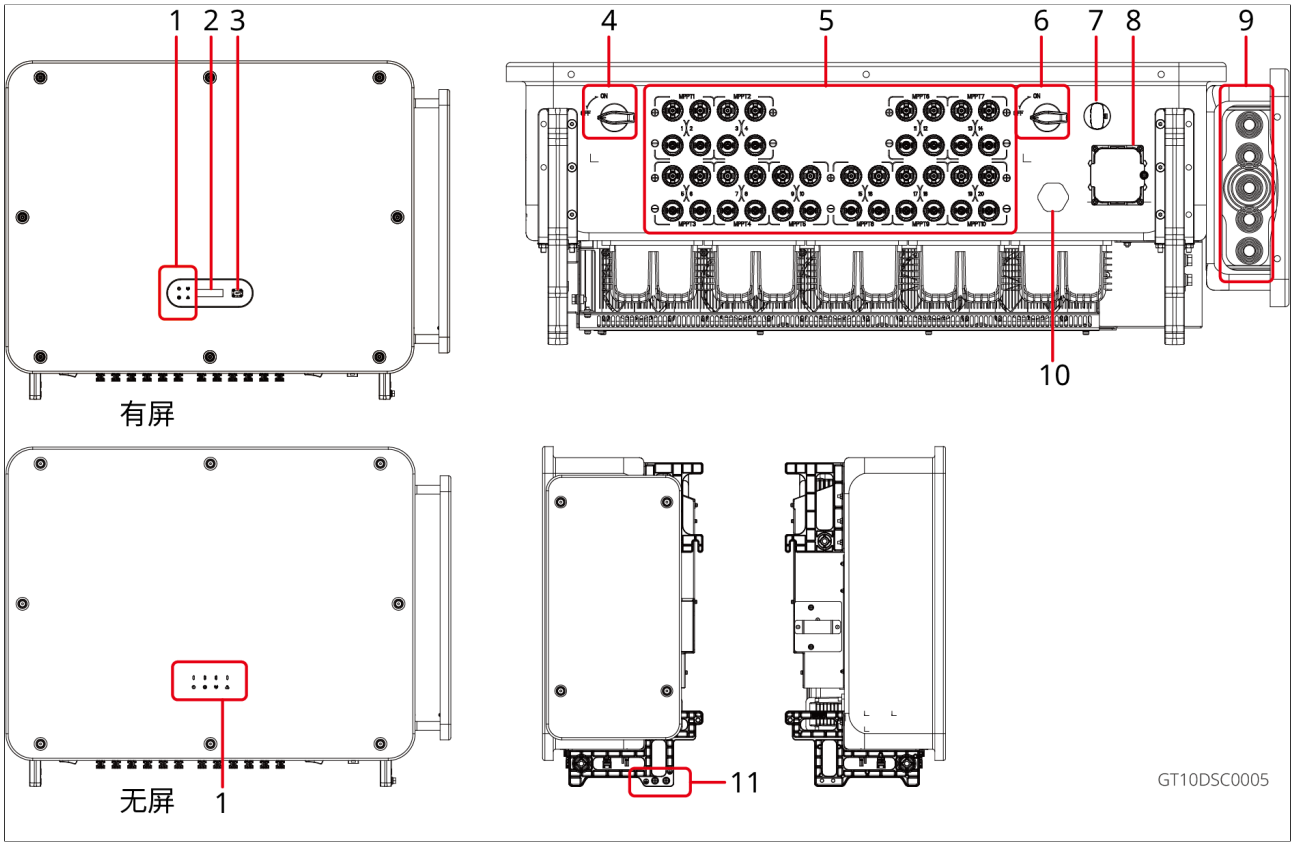

No.	Component	Description
1	Indicator	Indicating the working status of the inverter and the SOC of the battery
2	LCD (optional)	Used to check the parameters of the inverter（Matched with Keys / Used with Buttons）
3	Button (optional)	Used to select menus displayed on the screen）
4	DC Switch 1	Controlling the connection or disconnection of DC input MPPT1-5
5	PV Input Terminal	Used to connect the PV module DC input cables
6	DC Switch 2	Controlling the connection or disconnection of DC input MPPT6-10
7	Smart Dongle Port	Connecting the Smart Dongle, and select the type of the Smart Dongle according to actual needs

8	Communication Port	Including multiple communication interfaces (e.g., RS485), which are used to connect communication cables for corresponding functions.
9	AC Cable Hole	Connecting the AC Input/Output Cable Hole
10	Ventilation valve	Waterproof and Breathable, Balancing Internal and External Air Pressure
11	Protective Grounding Terminal	Connecting the PE Cable

3.4.2 Dimensions

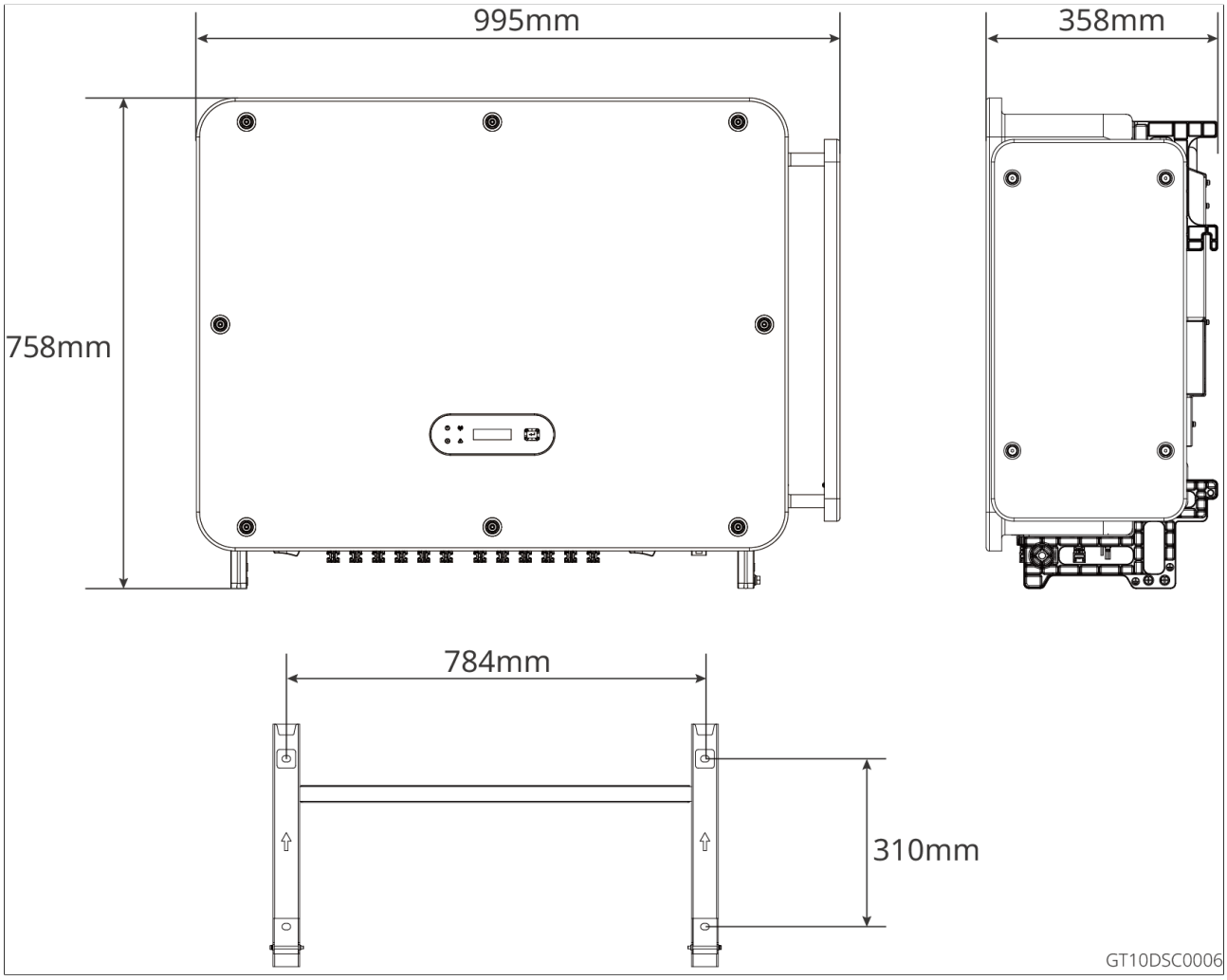

3.4.3 Indicator Description

Indicator	Status	Description
Power		On: Equipment Power On
		Power Off: The equipment is power off.
Running		On: THE INVERTER IS FEEDING POWER
		Power Off: THE INVERTER IS NOT FEEDING POWER
		SINGLE SLOW BLINKING SELF CHECK BEFORE CONNECTING TO THE GRID
		SINGLE FAST BLINKING CONNECTING TO THE GRID
Communication		On: WIRELESS IS CONNECTED/ACTIVE
		Blinks 1 time: WIRELESS SYSTEM IS RESETTING
		Blinks 2 times: WIRELESS IS NOT CONNECTED TO ROUTER OR BASE STATION
		Blinks 4 times: NOT CONNECTED TO MONITORING SERVER
		Blinks: RS485 communication normal
		Power Off: WIRELESS IS RESTORING FACTORY DEFAULT SETTING
Fault		On: System Failure
		Power Off: No Fault

3.4.4 Nameplate Description

The nameplates are for reference only. The actual product may differ.

A	B	C	D

GW trademark, product type, and product model	Technical Parameters	Safety Symbols and Certification Marks	Contact Details, No. information

3.5 Features

AFCI
The inverter is integrated with an AFCI (Arc-Fault Circuit Interrupter) protection device used to detect arc faults and rapidly disconnect the circuit to avoid electrical fires.
Reason to occur electric arcs:

- Damaged connectors in PV or battery system.
- Wrong connected or broken cables.
- Aging of connectors and cables.

Troubleshooting:

- The inverter has integrated AFCI function, and meets the IEC 63027 standard.
- When the inverter detects an electric arc, users can find the time of the fault and the detailed phenomenon through SolarGo App.
- After the inverter triggers the AFCI alarm, it will shut down for protection, and automatically reconnect to the grid to resume operation once the alarm is cleared.
  - Automatic reconnection: The alarm can be cleared automatically after 5 minutes, if the inverter triggers the AFCI alarm for less than 5 times within 24 hours, and the inverter will reconnect to the grid to resume operation.
  - Manual reconnection: The alarm must be cleared manually before the inverter can reconnect to the grid to resume operation, if the inverter triggers the 5th AFCI alarm within 24 hours. For more details, refer to the SolarGo App User Manual.

Model	Label	Description

GW150K-GT-G10	F-I-AFPE-1-4/6/4/6-4	F (Full coverage): Full coverage inverter PV input port I (Integrated): AFPE (Arc Fault Protection Equipment) integrated in the inverter: combines two arc detection functions of AFD and AFI 1: A pair of PV input ports (PV+, PV-) connected to a string of PV input strings 4/ 6/ 4/ 4: The number of PV input ports detected by one arc detection sensor 4: The quantity of arc detection sensors.

PID Restoration (Optional)
During the operation of a PV panel, a potential difference exists between its output electrodes and grounded frame. Over time, this causes reduced power generation efficiency, known as Potential Induced Degradation (PID).
The PID function of this device works by increasing the voltage difference between the photovoltaic (PV) panel and its frame to create a positive voltage difference (referred to as positive voltage elevation). This achieves the effect of PID suppression and is applicable to P-type PV panels as well as N-type PV panels that require positive voltage elevation to suppress the PID effect. For N-type solar panels that require negative voltage reduction to suppress the PID effect, it is recommended to disable this function. Please consult the module supplier to confirm whether the N-type module belongs to the type that requires positive pressure elevation for PID suppression.

Nighttime SVG (Optional)
The nighttime SVG (Static Var Generator) function refers to the capability of an inverter to continue providing reactive power compensation during the night or when there is no solar energy input, thereby improving the power factor of the power grid, reducing grid losses, and maintaining voltage stability.

PLC Networking (Optional)
Utilizing the existing power cable communication, no need for additional communication cable installation. The maximum power cable communication distance between the inverter and the Smart Energy Controller (SCU3000-S) is 1000

meters.

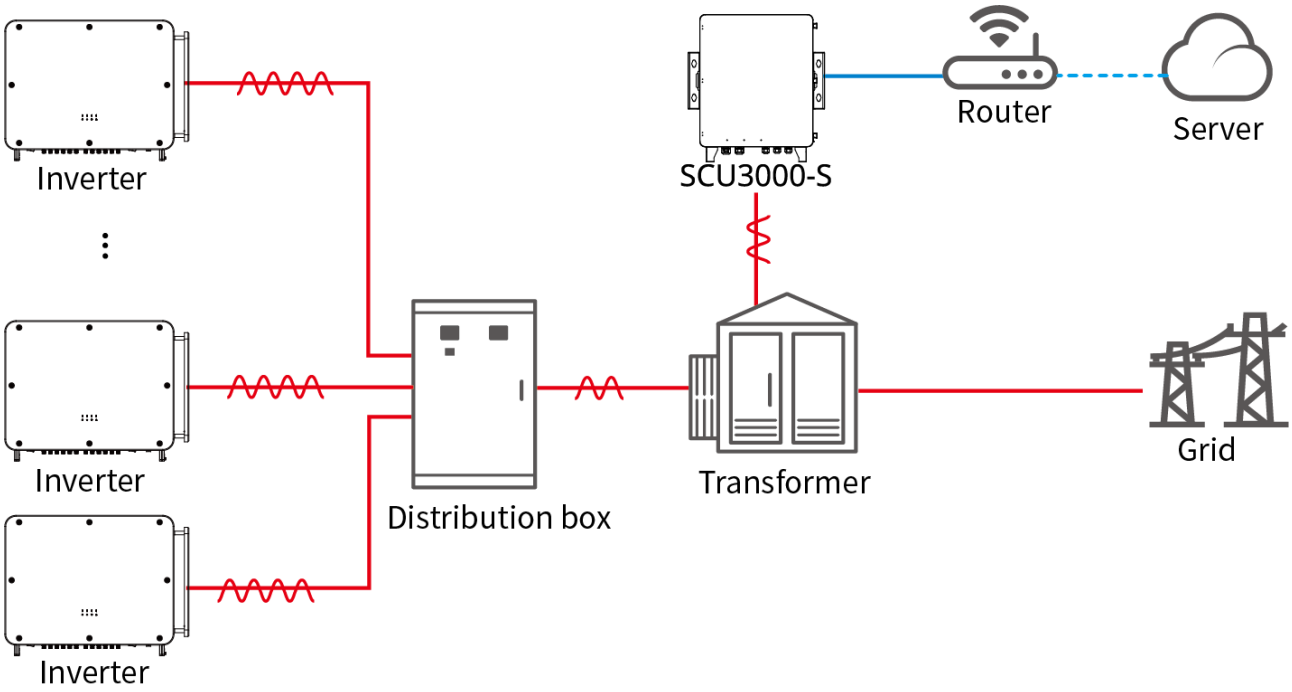

Nighttime Power Supply (Optional)

When the light is insufficient or absent at night, the inverter can import electricity from the power grid to maintain the operation of its essential functions (such as monitoring, communication, and safety modules), enabling 24-hour load monitoring, nighttime remote upgrades, and other functions.

3.6 Operation Mode of Inverters

No.	Component	Description
1	Standby Mode	Standby stage after the machine is powered on. • When the conditions are met, enter self-check mode. • If a fault occurs, the inverter enters fault mode. • If an upgrade request is received, enter upgrade mode.

2	Self-check Mode	Before the inverter starts, it continuously performs self-checks, initialization, etc. • If the conditions are met, the on-grid mode is activated and the inverter starts grid connection operation. • If an upgrade request is received, enter upgrade mode. • If the self-check fails, the device enters fault mode.
3	On-grid Mode	The inverter is normal and in the on-grid mode. • If a fault is detected, the system enters fault mode. • If an upgrade request is received, enter upgrade mode.
4	Fault Mode	If a fault is detected, the inverter enters fault mode and waits until the fault is cleared before entering standby mode. After the standby mode ends, the inverter detects the operating status and then enters the next operating mode.
5	Upgrade Mode	The inverter enters this state when the program is updated. When the program update is complete, enter standby mode. After the standby mode ends, the inverter detects the operating status and then enters the next operating mode.

4 Check and Storage

4.1 Check Before Receiving

Check the following items before accept:

1. Check the outer packing box for damage, such as holes, cracks, deformation, and other signs of equipment damage. Do not unpack the package and contact the supplier as soon as possible if any damage is found.
2. Check the inverter model. If the product model is not what you requested, do not unpack the product and contact the supplier.
3. Check the deliverables for correct model, quantity and intact appearance. Contact the supplier as soon as possible if any damage is found.

4.2 Deliverables

NOTICE

- For electrical connections, please use the delivered DC connectors. The manufacturer shall not be liable for the damage if other incompatible connectors are used.
- The quantity of delivered fastening screws and pin terminals varies for different inverter configuration. You may refer to the actual situation.
- N represents the quantity of delivered accessories varies depending on the specific inverter model.

Component	Quantity	Component	Quantity
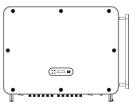	Inverter x 1		Mounting plate x 1
	2PIN terminal x N	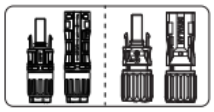	DC Connector x 20

	4PIN terminal x N		Smart dongle x1
	6PIN terminal x 1		8PIN terminal x N
	PIN terminal x N		DC connector wrench x 2
	Combination screw x 4		Communication protection cover x 1
	Document x 1		Handle x 1

4.3 Storage

If the equipment is not to be installed or used immediately, please ensure that the storage environment meets the following requirements:

1. Do not unpack the outer package or throw the desiccant away.
2. Store the equipment in a clean place. Make sure the temperature and humidity are appropriate and no condensation.
3. The height and direction of the stacking equipment should follow the instructions on the packing box.
4. The equipment must be stacked with caution to prevent them from falling.

5. If the inverter has been stored for more than two years or has not been in operation for more than six months after installation, it is recommended to be inspected and tested by professionals before being put into use.
6. To ensure good electrical performance of the internal electronic components of the inverter, it is recommended to power it on every 6 months during storage. If it has not been powered on for more than 6 months, it is recommended to be inspected and tested by professionals before being put into use.

5 Installation

5.1 Installation Requirements

Installation Environment Requirements

1. Do not install the equipment in a place near flammable, explosive, or corrosive materials.
2. The mounting bracket is sturdy and reliable, capable of supporting the weight of the inverter.
3. The place to install the equipment shall be well-ventilated for heat radiation and large enough for operations.
4. The equipment with a high ingress protection level can be installed indoors or outdoors. The temperature and humidity at the installation site should be within the appropriate range.
5. Install the inverter in a sheltered place to avoid direct sunlight, rain, and snow. Build a sunshade if it is needed.
6. The installation site should be out of the reach of children and away from areas that are easily accessible. High temperatures may exist on the surface of the equipment during operation to prevent burns.
7. Install the equipment at a height that is convenient for operation and maintenance, electrical connections, and checking indicators and labels.
8. The altitude to install the equipment shall be lower than the maximum working altitude 4000m.
9. The inverter is easy to be corroded when installed in salt-affected areas. A salt-affected area refers to the region within 1000 meters offshore or affected by the sea breeze. The area prone to the sea breeze varies depending on weather conditions (e.g. typhoon, monsoon) or terrain (such as dams and hills).
10. Install the equipment away from electromagnetic interference. If there is any radio or wireless communication equipment below 30MHz near the equipment, you have to:

- Add a low pass EMI filter or a multi winding ferrite core to the DC input cable or AC output cable of the inverter.
- Install the inverter at least 30m far away from the wireless equipment.

Installation Support Requirements

- The mounting support shall be nonflammable and fireproof.

- Make sure that the support surface is solid enough to bear the product weight load.
- Do not install the product on the support with poor sound insulation to avoid the noise generated by the working product, which may annoy the residents nearby.

Installation Angle Requirements

- Install the inverter vertically or at a maximum back tilt of 15 degrees.
- Do not install the inverter upside down, forward tilt, back forward tilt, or horizontally.

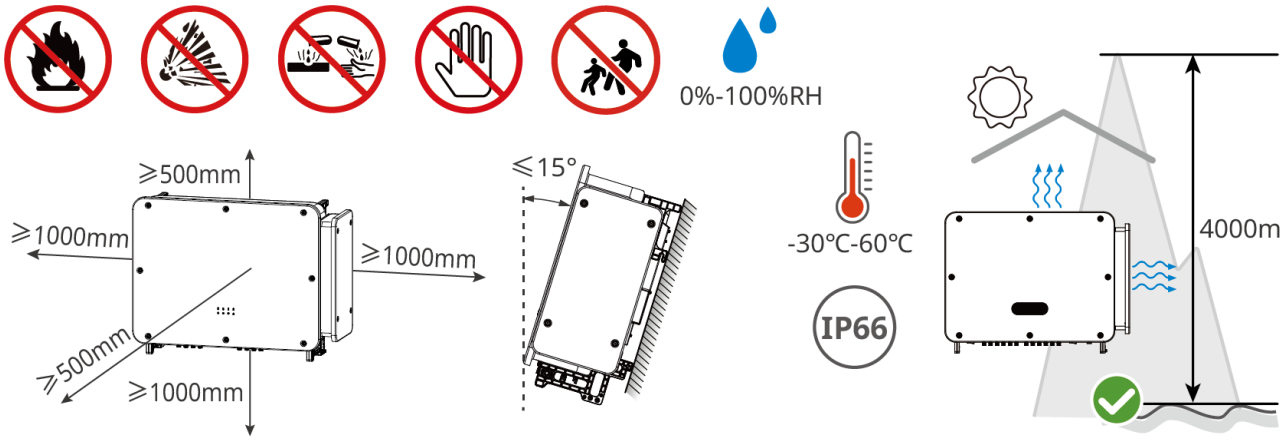

GT10INT0007

Installation Tool

The following tools are recommended when installing the equipment. Use other auxiliary tools on site if necessary.

Tool Type	Description	Tool Type	Description
	Insulating gloves and protective gloves	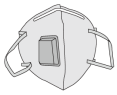	Dust mask
	Goggles		Safety shoes

	Torque wrench		Impact drill
	Diagonal pliers		Heat gun
	Wire stripper		RJ45 crimping tool
	Rubber hammer		Marker
	Multimeter		Heat shrink tube
	Vacuum cleaner		Level ruler
	Adjustable wrench		Jinko DC unlocking tool
	Socket tool		

5.2 Inverter Installation

5.2.1 Moving the Inverter

⚠CAUTION

Move the inverter to the site before installation. Follow the instructions below to avoid personal injury or equipment damage.

1. Consider the weight of the equipment before moving it. Assign enough personnel to move the equipment to avoid personal injury.
2. Wear safety gloves to avoid personal injury.
3. Keep the equipment in balance to avoid its falling down during moving.

5.2.2 Inverter Installation

NOTICE

- Avoid the water pipes and cables buried in the wall when drilling holes.
- Wear goggles and a dust mask to prevent the dust from being inhaled or contacting eyes when drilling holes.
- Avoid the water pipes and cables buried in the wall when drilling holes.
- If a bracket is required for installing the inverter, please prepare the bracket by yourself and secure it properly.
- Please contact the after-sales service center, if handles or lifting rings are required.
- The appearance of graphics in this document is only for reference. There may be differences in the appearance of different models. The actual product prevails.

Step 1: Put the mounting plate on the wall or a rack horizontally and mark positions for drilling holes.
Step 2: Use an impact drill with a 10mm-diameter drill bit to make holes, ensuring the hole depth is approximately 80mm.
Step 3: Secure the mounting plate on the wall or a rack using the expansion bolts.
Step 4: Install the handles or lifting rings on both sides of the inverter. The installer shall carry the inverter by holding the handles or lift it for transportation, then hang the inverter on the wall-mounted bracket.
Step 5: Tighten the nuts to secure the mounting plate and the inverter.

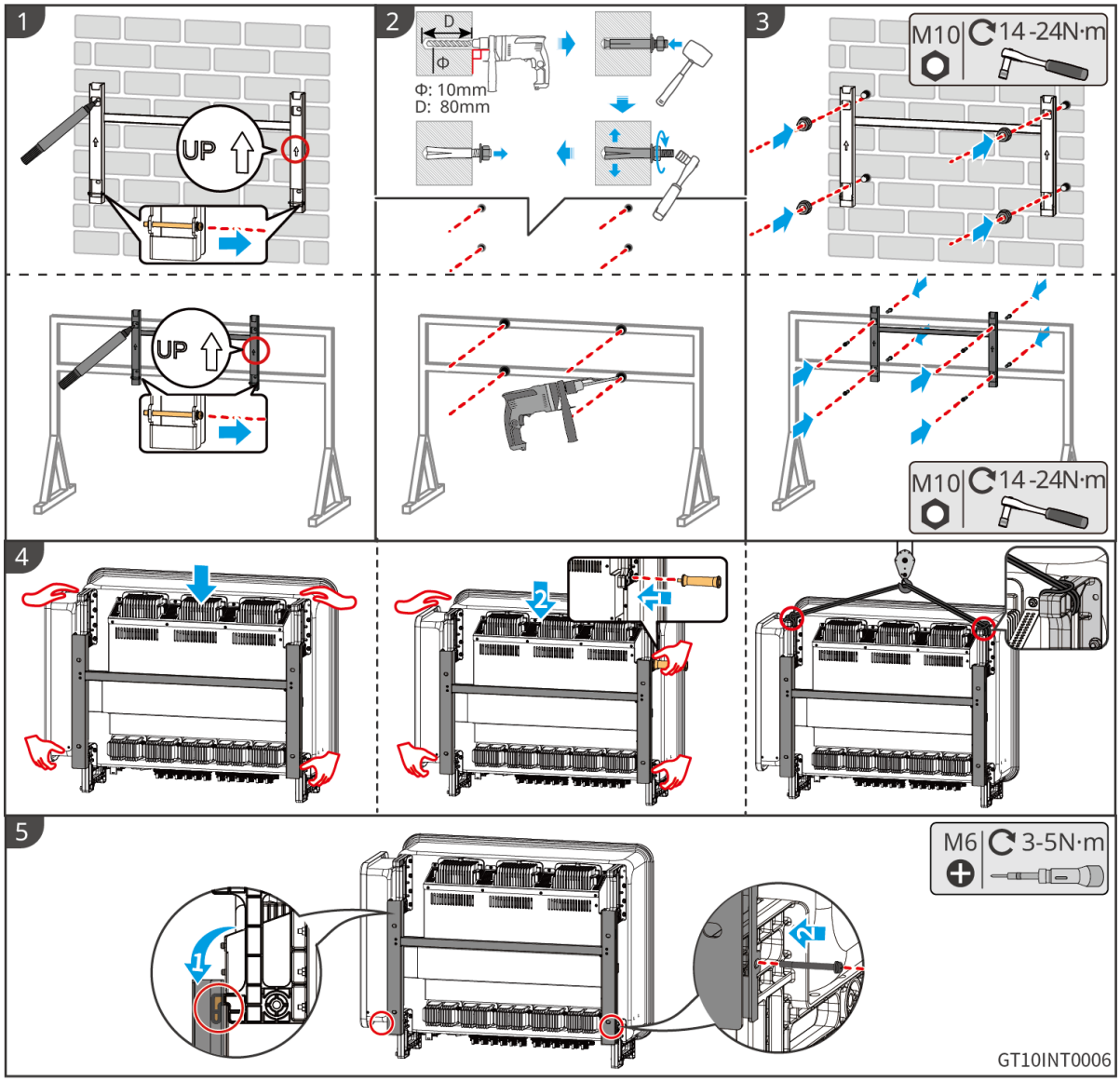
1
UP
2
D
Φ
Φ: 10mm
D: 80mm
3
M10
14-24N·m
UP
M10
14-24N·m
4
2
5
M6
3-5N·m
1
2
GT10INT0006

6 Electrical Connections

6.1 Safety Precautions

⚠DANGER

- Disconnect the DC switch and the AC output switch of the inverter to power off the inverter before any electrical connections. Do not work with power on. Otherwise, an electric shock may occur.
- All operations, cables and parts specification during the electrical connection shall be in compliance with local laws and regulations.
- If the cable bears too much tension, the connection may be poor. Reserve a certain length of the cable before connecting it to the Inverter cable port.

NOTICE

- Wear personal protective equipment like safety shoes, safety gloves, and insulating gloves during electrical connections.
- All electrical connections should be performed by qualified professionals.
- Cable colors in this document are for reference only, the cable specifications shall meet local laws and regulations.
- The appearance of graphics in this document is only for reference. There may be differences in the appearance of different models. The actual product prevails.

Cable Specification Requirement

Cable	Type	Cable Specification	
		Diameter	Conductor Cross-Sectional Area (^{2})
DC Cable	PV cable that meets 1100V standard	4.7-6.4	Recommended: 4 to 6

AC Cable	Single-core Stranded Outdoor Copper/Aluminum Wire [1]	14~34	S_{AC}: Copper Core: 95-400	S_{AC}: Aluminum Core: 120-400
	Multiple-core Stranded Copper/Aluminum Wire [1]	22~66	S_{AC}: Copper Core: 95-240	S_{AC}: Aluminum Core: 120-240
PE Cable	Outdoor Cable	S_{PE}1/2 S_{AC}		
Communication Cable	Outdoor Shielded Twisted-Pair Cable Meeting Local Standards [2]	4~6	0.2~0.5	

Note: [1] If you prefer aluminum cables, remember to use copper to aluminum transition terminals.
[2] Overall length of communication cable cannot exceed 1000 m.
[3] The values in this table are valid only when the external protective grounding conductor is made of the same metal as the phase conductor. Otherwise, the cross-sectional area of the external protective grounding conductor should be selected to ensure that its conductivity is equivalent to that specified in this table.

6.2 Connecting the PE Cable

⚠WARNING

- The PE cable connected to the enclosure of the inverter cannot replace the PE cable connected to the AC output port. Make sure that both of the two PE cables are securely connected.
- Make sure that all the groundings are tightly connected. When there are multiple inverters, make sure that all the grounding points on the enclosures are equipotential bonding.
- To improve the corrosion resistance of the terminal, it is recommended to apply silica gel or paint on the ground terminal after installing the PE cable.
- PE cable and terminal should be prepared by customers according to the recommended specifications.
  Ground wires of other sizes that meet local standards and safety regulations can also be used for grounding connections. The manufacturer shall not be liable for the damage thereby.

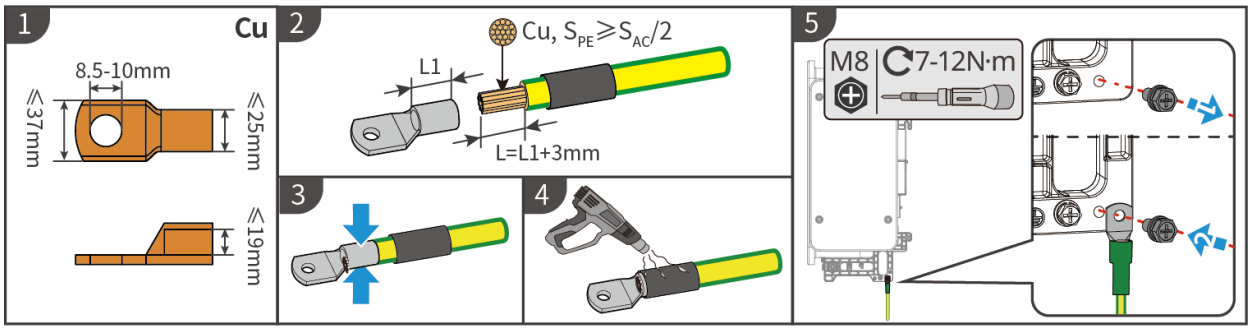

GT10ELC0008

6.3 Connecting the AC Output Cable

⚠WARNING

- Do not connect loads between the inverter and the AC switch directly connected to the inverter.
- The Residual Current Monitoring Unit (RCMU) is integrated into the inverter. The inverter will disconnect the utility grid rapidly once it detects any leak current over the permissible range.

Decide whether to install RCD (Residual Current Monitoring Device) according to local laws and regulations. A type RCD shall be added to protect the equipment when the DC component of the leakage current exceeds limits. The following RCD

specifications are for reference: 1500mA.

Inverter Model	RCD Specification
GW150K-GT-G10	1500mA
GW100K-GT-L-G10	1000mA

NOTICE
Install one AC output circuit switch for each inverter. Multiple inverters cannot share one AC circuit switch.

An AC circuit breaker shall be installed on the AC side to make sure that the inverter can safely disconnect the grid when an exception happens. Select the appropriate AC circuit switch in compliance with local laws and regulations. The following switch specifications are for reference:

Inverter Model	AC Circuit Breaker Specification
GW150K-GT-G10	315A/400V
GW100K-GT-L-G10	

⚠WARNING

- When wiring, the AC output wires must be fully matched with the "L1", "L2", "L3", "N", and "PE" port of the AC terminal. Incorrect wire connection will cause damage to the inverter.
- Make sure that the whole cable cores are inserted into the AC terminal holes. No part of the cable core can be exposed.
- Make sure that the cables are connected securely. Otherwise, the terminal may be too hot to damage the inverter when the inverter is working.
- The AC output terminal supports both three-phase four-wire and three-phase five-wire connection configurations; the actual wiring configuration should depend on the specific installation scenario. In this document, the three-phase five-wire configuration is described as an example.
- Ensure that extra length is reserved for the protective grounding conductor, so it will be the last conductor to bear stress if the AC output cables experience tension due to force majeure.
- The waterproof rubber gaskets for AC outlet holes are supplied with the inverter and located in the inverter's AC junction box. Please select the corresponding hole position on the rubber gasket according to the actual specification of the cable used.
- Please prepare the AC wiring OT terminals by yourself.
- If aluminum cables are used, remember to connect copper to aluminum transition terminals.

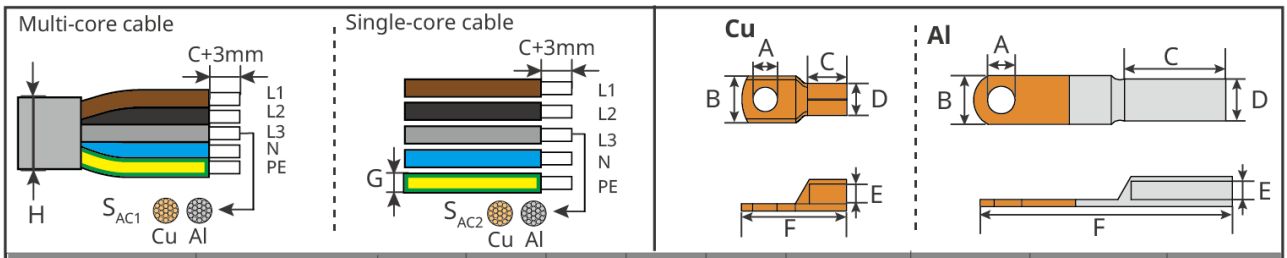

Cable Material	Cable Type	A (mm)	B (mm)	D (mm)	E (mm)	F (mm)	G (mm)	H (mm)	S_{AC1} (mm^2)	S_{AC2} (mm^2)
Cu	**L1/L2/L3**	12.5-14	⩽50	⩽34	⩽27	⩽170	Φ:14-34	Φ:22-66	95-240	95-400
	N	12.5-14	⩽37	⩽25	⩽19	-			$S_{AC1}/2$	$S_{AC2}/2$
	PE	8.5-10								
Al	**L1/L2/L3**	12.5-14	⩽50	⩽38	⩽27	⩽170	Φ:14-34	Φ:22-66	120-240	120-400
	N	12.5-14	⩽37	⩽27	⩽19	⩽133			$S_{AC1}/2$	$S_{AC2}/2$

GT10ELC0014

Step 1: Disassemble the AC cables cover plate.

Step 2: Remove the screws and rubber gaskets.
Step 3: Select the corresponding hole size according to the AC wire diameter specification, and cut off the semicircular pieces from the rubber gaskets located on the cabinet and the cover plate respectively.
Step 4: Thread the cable through the plastic gasket.
Step 5 Crimp the OT terminals onto the AC wires to make the AC output cables.
Step 6: Fasten the AC cables to the inverter.
Step 7: Fasten the AC cables cover plate.

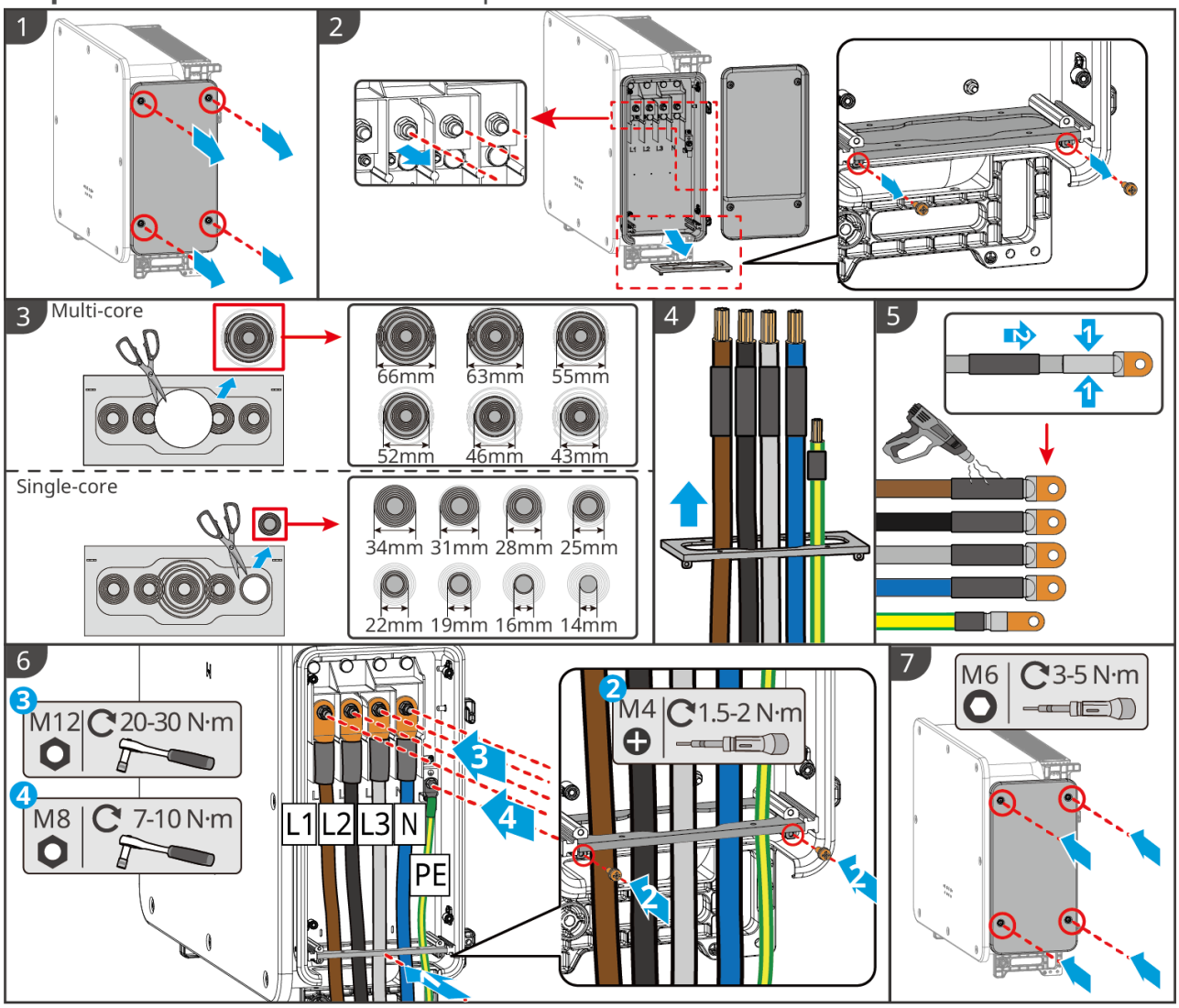

GT10ELC0011

6.4 Connecting the DC Input Cable

DANGER

1. Do not connect one battery to more than one inverter at the same time. Otherwise, it may cause damage to the inverter.
2. The PV strings cannot be grounded. Ensure the minimum insulation resistance of the PV string to the ground meets the minimum insulation resistance requirements before connecting the PV string to the inverter.
3. Connect the inverter DC cables using the delivered DC connectors.
4. Confirm the following information before connecting the PV string to the inverter. Otherwise, the inverter may be damaged permanently or even cause fire and cause personal and property losses. Damage and injury caused by failure to operate in accordance with the requirements of this document or the corresponding user manual are not covered by the warranty.

- Make sure that the positive pole of the PV string connects to the PV+ of the inverter. And the negative pole of the PV string connects to the PV- of the inverter.
- Make sure that the open circuit voltage of the PV string connected to each MPPT shall not exceed Max. Input Voltage. When the input voltage ranges from 1000 to 1100V, inverter is in standby mode. When the input voltage returns to 180 to 1000V, the inverter will resume normal operating state.

⚠WARNING

- The PV String connected to the same MPPT must use the same model and the same number of PV modules.
- To maximize the Inverter power Efficiency generation, ensure that the maximum Power point voltage of the series-connected PV modules falls within the MPPT Voltage Range at Nominal Power range of the Inverter.
- Ensure that the voltage difference between different MPPT channels is less than or equal to 150V.
  Ensure that the input current of each MPPT is less than or equal to Max. Input Current per MPPT of inverter, referring to the Technical Data.
- When there are multiple PV strings, it is recommended to maximize the connections of MPPTs.

PV String Connection Method

NOTICE
For maximizing power generation, it is recommended to access PV strings in the way as follows:

When the number of PV strings is <=10, connect the PV strings to the inverter from MPPT1 to MPPT10 sequentially.
When the number of PV strings is >10, connect the PV strings to the inverter in accordance with the table below

•: Connect a string of PV modules

••: Connect two strings of PV modules

PVString Numbers	MPPT1	MPPT2	MPPT3	MPPT4	MPPT5	MPPT6	MPPT7	MPPT8	MPPT9	MPPT10
11	••	•	•	•	•	•	•	•	•	•
12	••	•	•	•	•	•	•	•	•	•
13	••	••	••	•	•	•	•	•	•	•
14	••	••	••	••	•	•	•	•	•	•
15	••	••	••	••	•	•	••	•	•	•
16	••	••	••	••	•	•	••	••	•	•
17	••	••	••	••	•	•	••	••	•	••
18	••	••	••	••	•	•	••	••	••	••
19	••	••	••	••	••	•	••	••	••	••
20	••	••	••	••	••	•	••	••	••	••

NOTICE
If the DC input terminals of the inverter do not need to be connected to PV strings, please use dust caps to seal the terminals. Otherwise, the equipment protection level will be affected.

Step 1: Prepare DC cables.
Step 2: Disconnect the DC connector. Crimp the DC input terminals and assemble the DC connectors.
Step 3: Tighten the DC connectors.

Step4: Detect the DC input voltage.

Step5: Connect the DC connector to the DC terminal of the inverter.

Type I:

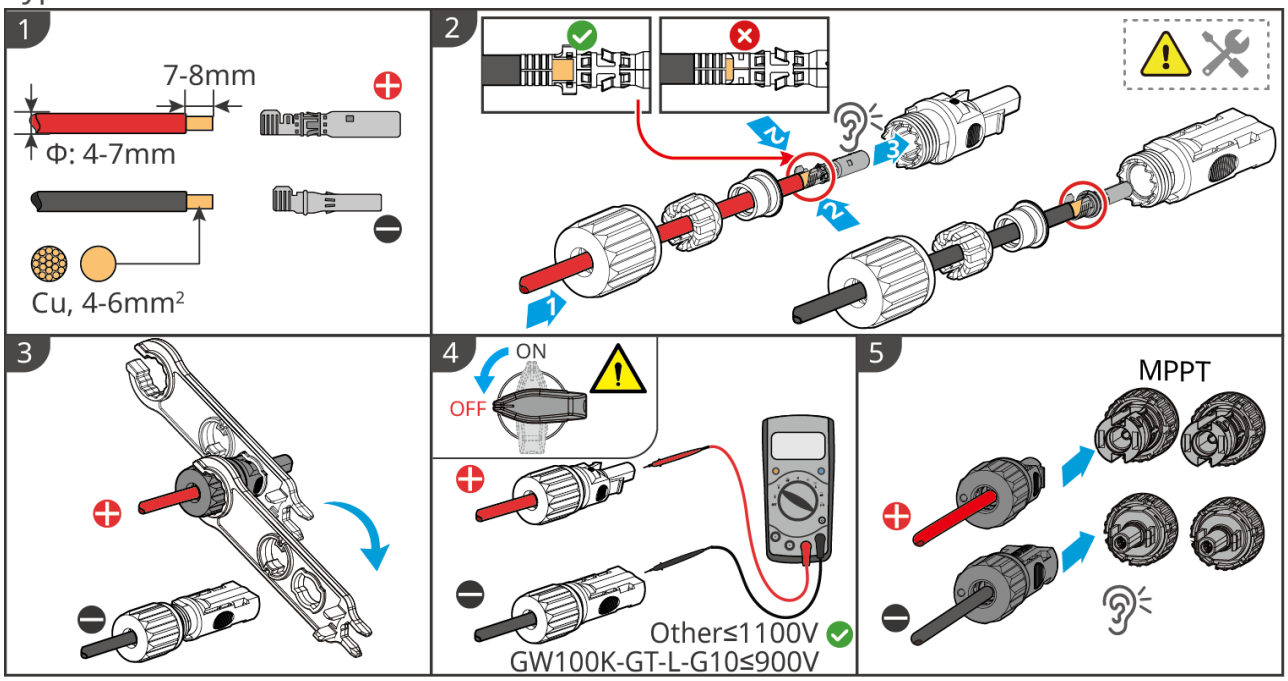

GT10ELC0010

Type I:

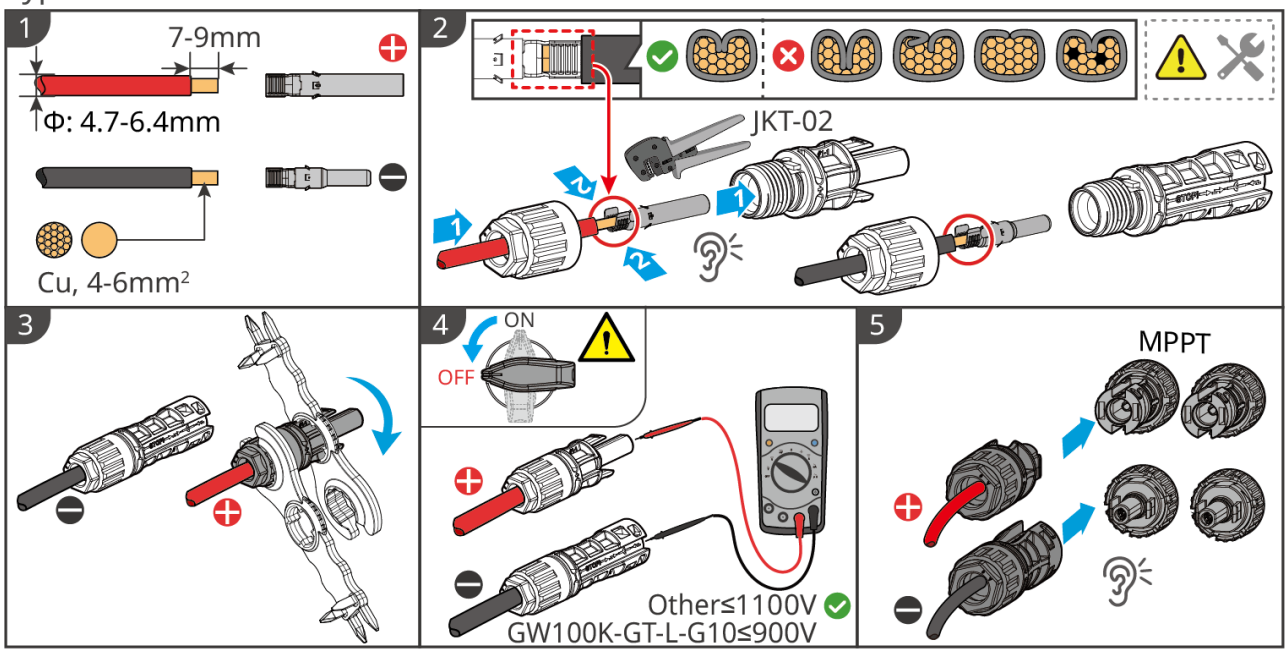

GT10ELC0009

Connect the Y-type PV connector (Optional)

NOTICE

1. If Y-type terminals are needed make sure the DC connector model of the Y-type terminal is the same as that of PV input terminal of the inverter. The manufacturer shall not be liable for the equipment damage if incompatible Y-type terminal is used.
2. It is necessary to ensure that all PV strings connected to one MPPT channel via Y-type terminals have a consistent structure, including parameters such as model, quantity, tilt angle, and azimuth angle.
3. The total current of strings connected via Y-type connectors needs to be less than the maximum allowable PV current.

6.5 Communication Connection

- The inverter supports connecting to other inverters, smart meters, data loggers (EzLogger3000C), Smart Energy Controller(SEC3000/ SEC3000) and other devices via RS485 signals, enabling functions such as parallel networking, on-grid power limit, and nighttime power supply.
- The inverter supports connecting to a mobile phone or Web interface via an smart dongle to set device-related parameters, view device operating information and error messages, and upload system operating information to a monitoring platform, facilitating timely understanding of the system status.

6.5.1 RS485 Communication Networking

NOTICE

- When using a data logger to form an RS485 network with multiple inverters, multiple inverters can be connected to each COM port of the data logger. When using the EzLogger3000C, each COM port can connect to a maximum of 20 inverters. When using the SEC3000/ SEC3000, each COM port can also connect to a maximum of 20 inverters. The total length of the RS485 cable for each COM port shall not exceed 1000 meters.
- When multiple inverters operate in parallel, to ensure normal communication, among the paralleled inverters, set the terminal resistor DIP switch of the last inverter to the ON position. The inverter is set to OFF by default at the factory.

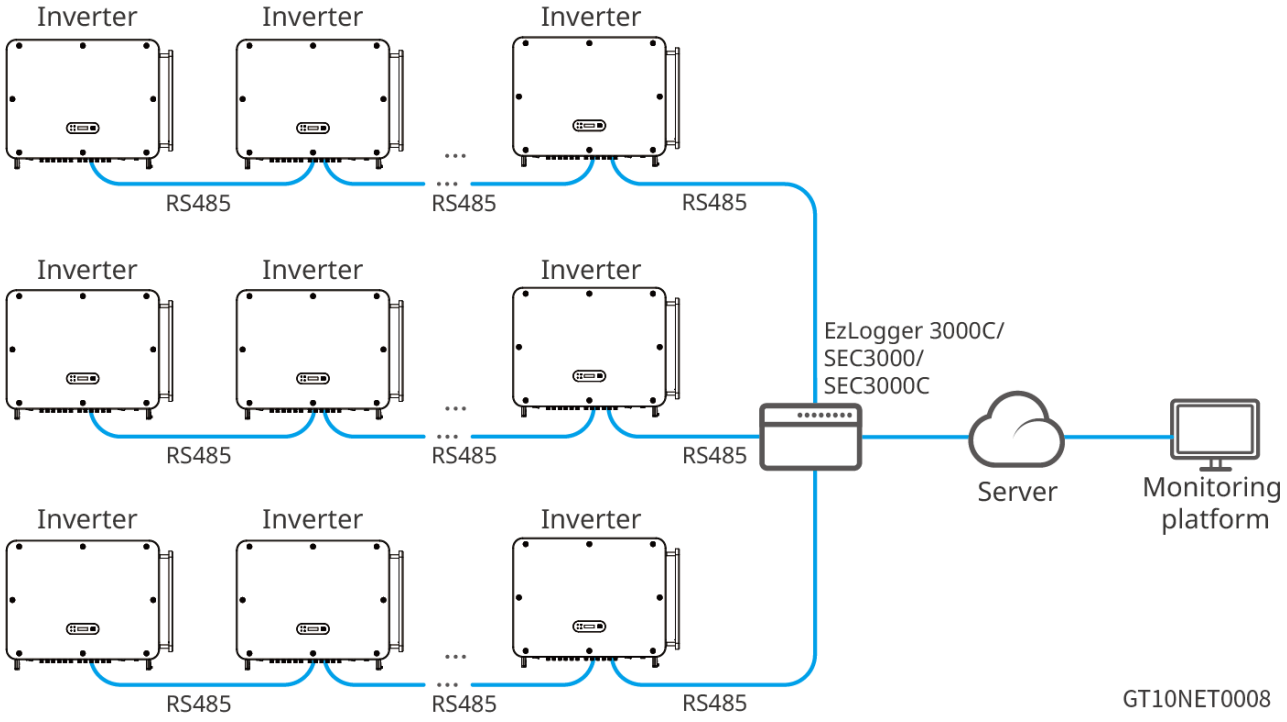

6.5.2 The Export Power Limit

When all loads in the PV system cannot consume the generated electricity, the surplus power will be fed into the grid. In this case, it is possible to monitor the power generation with a smart meter, smarts data logger or Smart Energy Controller SEC3000/SEC3000 or Smart Dongle Ezlink 3000 to control the amount of power fed into the grid.

⚠WARNING

1. The place to snap fit the CT shall be near the grid connection point and the installation direction must be right. “-->” of CT refers that the inverter current flows to the Grid. The inverter will be triggered with an alarm if CT is installed reversely. It is unable to realize the export power limit function.
2. The aperture of the CT should be larger than the outer diameter of the AC power line to ensure that the AC power line can pass through the CT.
3. For specific CT wirings, please refer to the documents provided by the respective manufacturer, to ensure that the wiring direction is correct and CT is able to work properly.
4. CT shall be snap fitted on Cable L1, L2, L3. Do not fit it on Cable N.
5. CT Specification requirement:
   - Selecting nA/5A for the current transformation ratio specification of the CT. (nA: For primary current of the CT, n ranges from 200 to 5000.Set the current value depending on the actual needs. 5A: CT Secondary side output voltage.)
   - For the accuracy of the CT, it is recommended to select 0.5, 0.5s, 0.2, 0.2s to ensure that the current sampling error of the CT is <= 1%.
6. To ensure the current detection accuracy of the CT, it is recommended that the length of the CT cable should not exceed 30m and the current-carrying capacity of the cable be 6A.

NOTICE

1. Ensure that the wiring and phase sequence of the smart meter are correct. Recommended cross-sectional area of the smart meter input power cable: 1mm^2(18AWG).
2. Only applicable to GoodWe electricity GM330:

- Setting the CT ratio via SolarGo App. For example: set the CT ratio to 40 if a 200A/5A CT is selected.
- If the networking scenario is three-phase three-wire, it is necessary to short-circuit the N wire and L2 wire on the electric meter side.
- Detailed steps, refer to SolarGo App User Manual

Single Inverter Export Power Limit Networking (GM330)

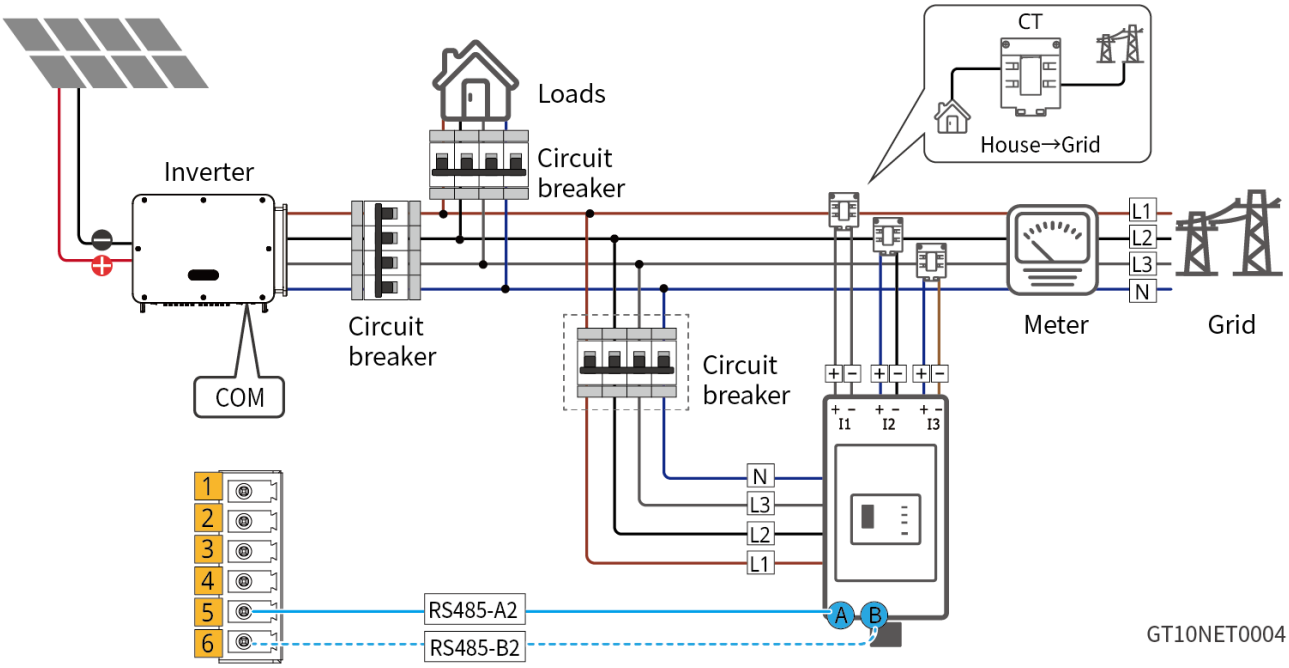

Multi Inverters Export Power Limit Networking (EzLogger3000C + GM330)

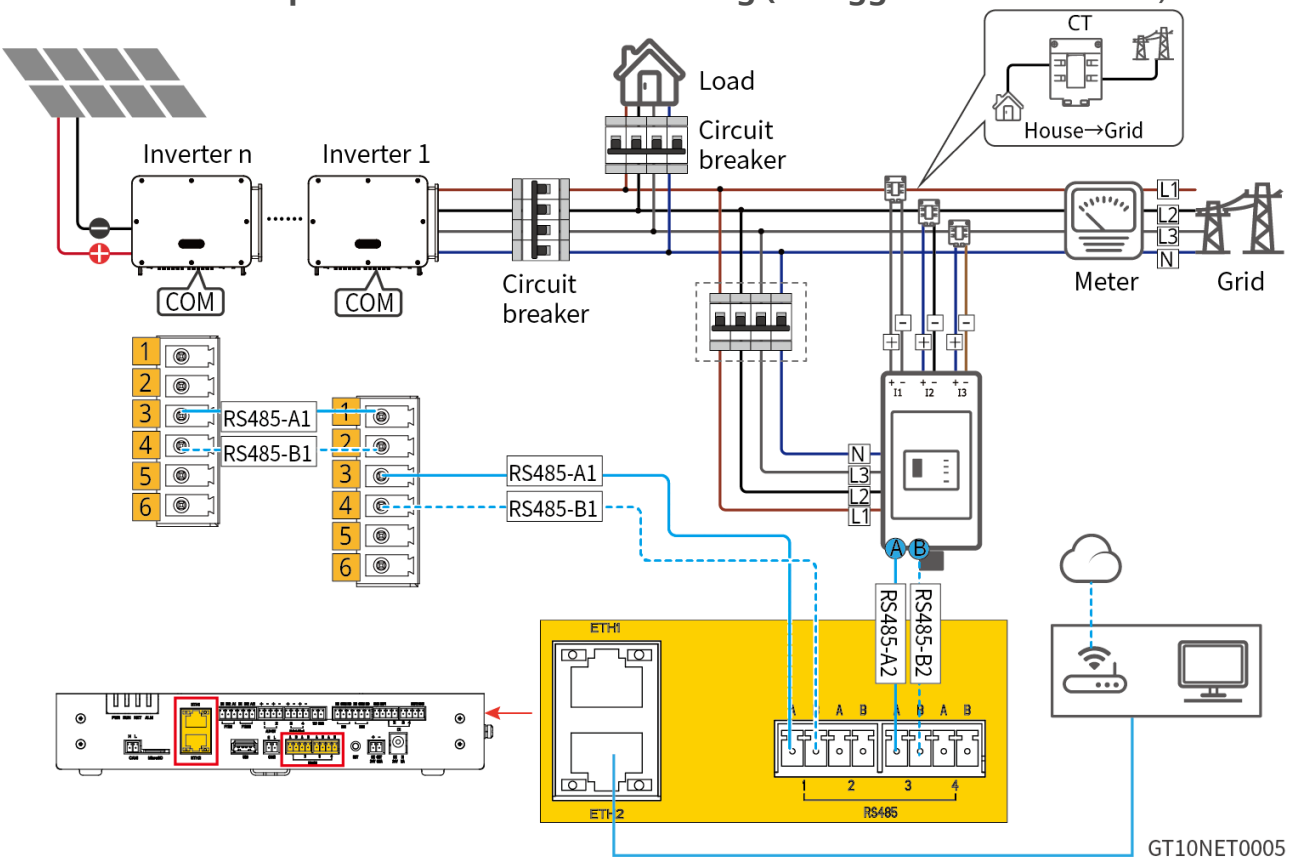

Multi Inverters Export Power Limit Networking (SEC3000/ SEC3000C)

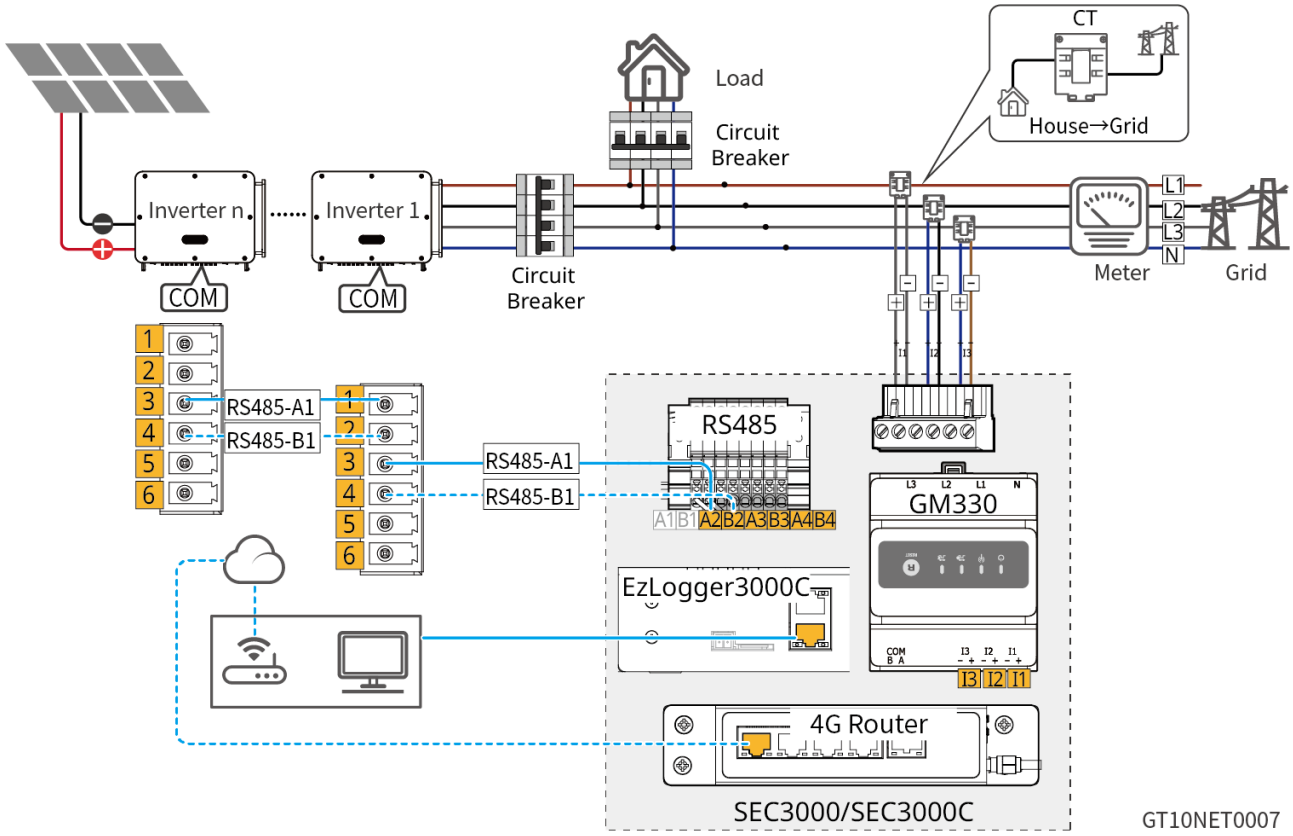

Multi Inverters Export Power Limit Networking (Ezlink3000)

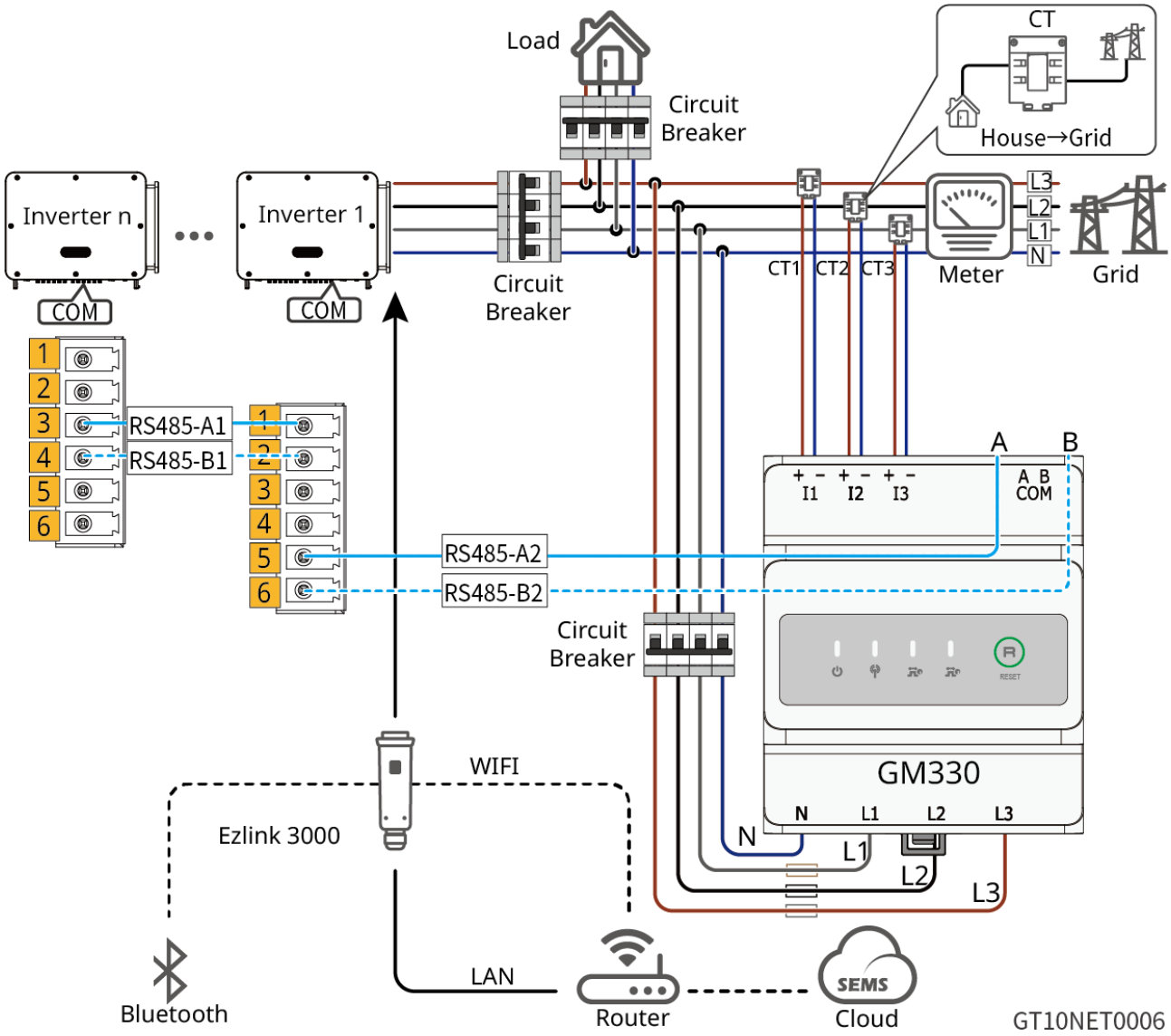

6.5.3 Connect the Communication Cable

NOTICE
• When connecting the communication cable, make sure that the wiring port definition and the equipment are fully matched, and the cable alignment path should avoid interference sources, power cables, etc., so as not to affect signal reception. • The remote shutdown and, EPO functions are disabled in default. Enable it via SolarGo App if needed. Detailed steps, refer to SolarGo App User Manual.

Communication Port

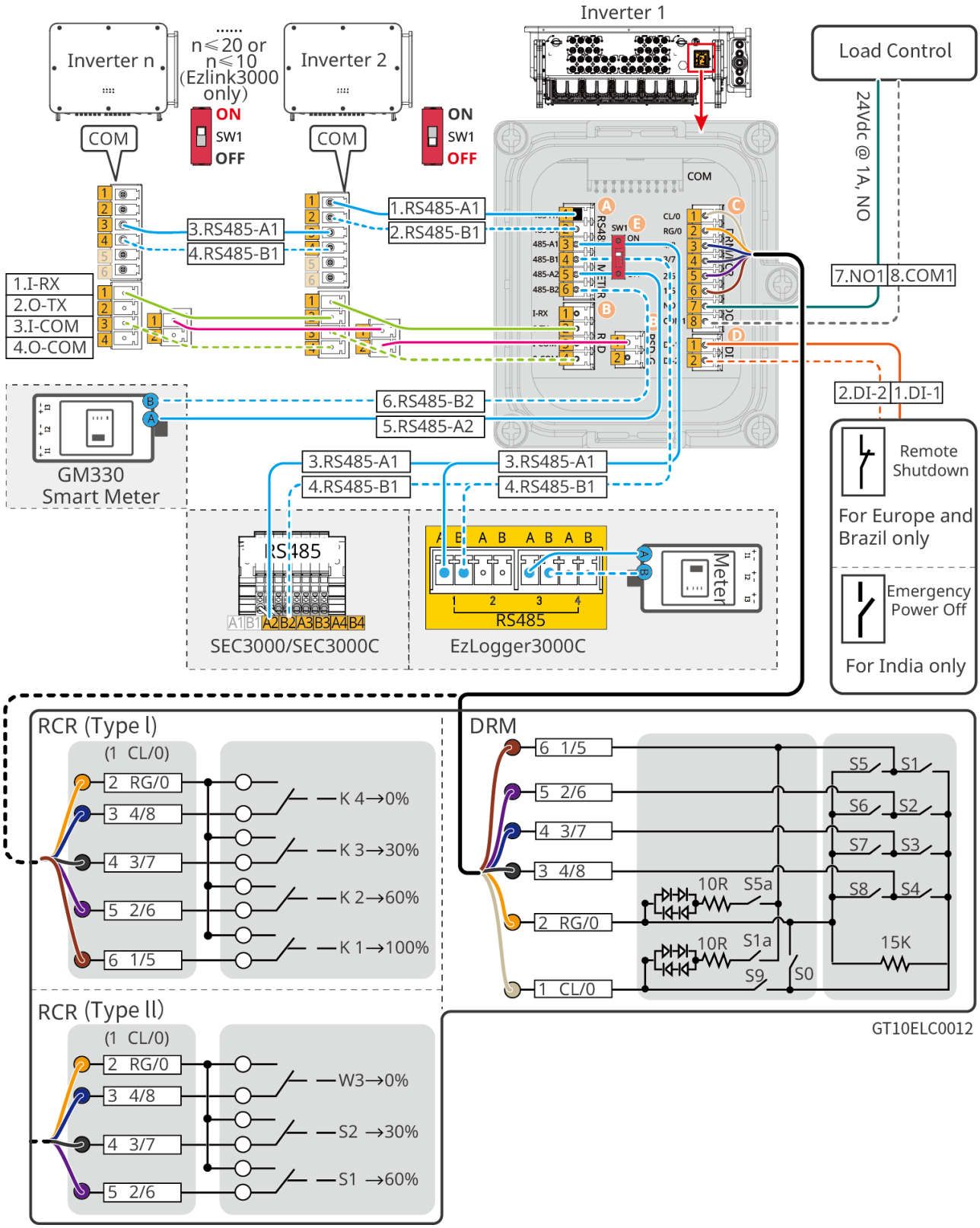

Function	Areas	No.	Name	Description
RS485	A	1	RS485-A1	Used for communication with multiple inverters, data loggers, and smart energy controller.
		2	RS485-B1	
		3	RS485-A1	
		4	RS485-B1	
		5	RS485-A2	Used for communication between the smart meters.
		6	RS485-B2	
RSD (Ra[id Shutdown)	B	1	I-RX	Used for parallel communication between multiple inverters when implementing the RSD function.
		2	O-TX	
		3	I-COM	
		4	O-COM	
		1	RSD-GND	
		2	RSD-GND	
DRM/RCR	C	1	CL/0	Connecting the DRED device (Australia only) or the RCR device (Europe only).
		2	RG/0	
		3	4/8	
		4	3/7	
		5	2/6	
		6	1/5	
Dry Contact		7	NO1	Used to control the start-up of diesel generators. The capacity of the DO contact is 24VDC@1A, and it is a NO (Normally Open) contact.
		8	COM1	
Remote Shutdown	D	1	DI-1	

		2	DI-2	Connecting the remote shutdown device (for European or Brazilian models only), and the emergency shutdown device (for Indian models only).

Communication Cable

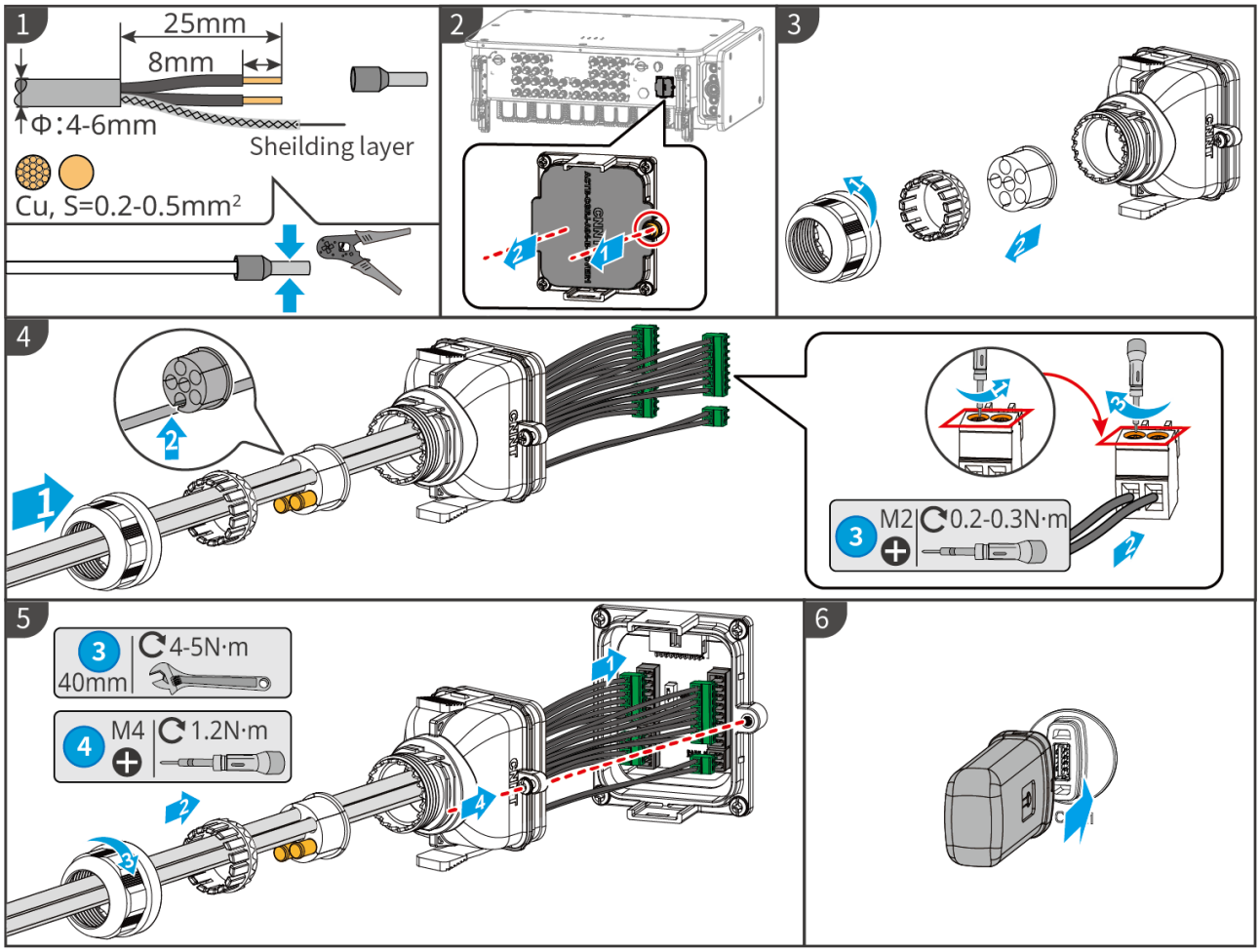

GT10ELC0013

7 Equipment Commissioning

7.1 Check Before Power On

No.	Check Item
1	The inverter shall be installed securely. The installation location shall allow easy operation and maintenance, the installation space shall facilitate ventilation and heat dissipation, and the installation environment shall be clean and tidy.
2	The PE, DC input, AC output, communication cables are connected correctly and securely.
3	The cable binding shall comply with routing requirements, with reasonable distribution and no damage.
4	Unused ports and terminals are sealed.
5	The voltage and frequency at the connection point meet the inverter grid connection requirements.

7.2 Equipment Power On

Step 1: Turn on the AC switch between the inverter and the utility grid.

Step 2: Turn on the DC switch of the inverter.

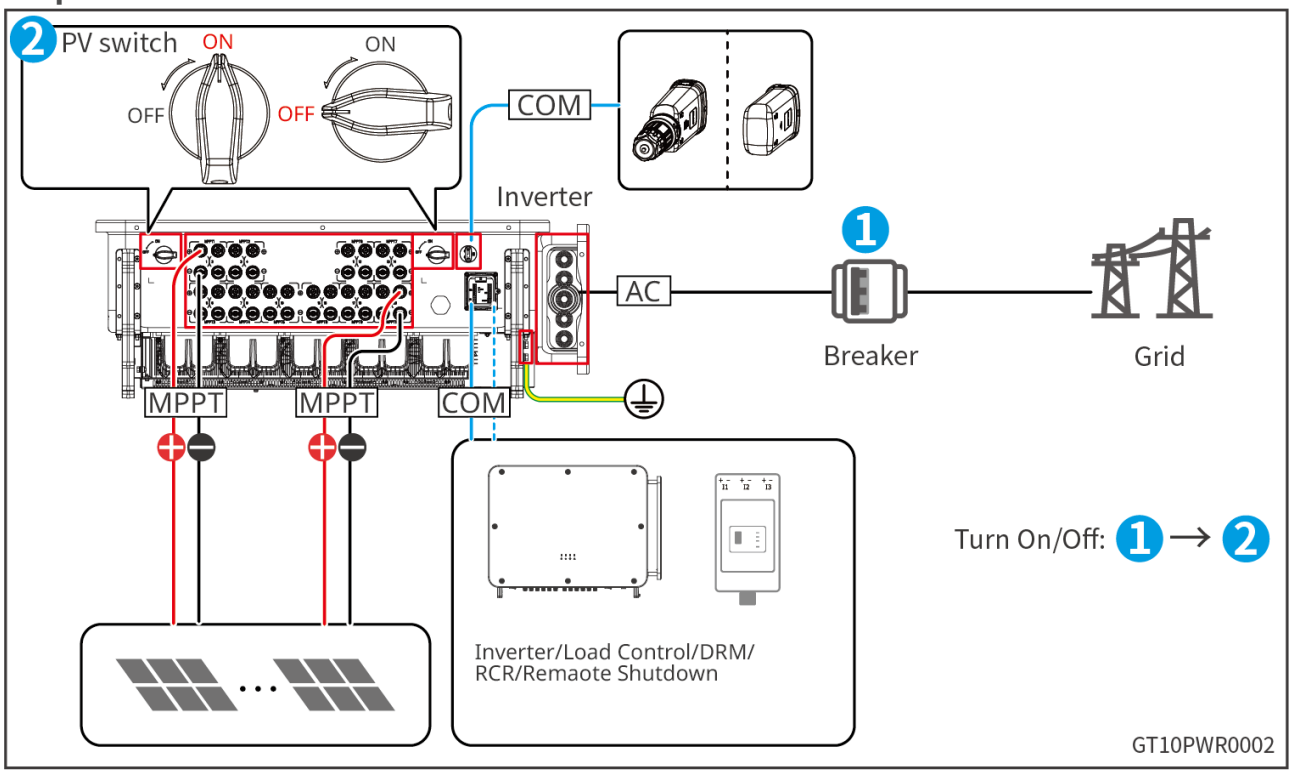

8 System Commissioning

8.1 Setting Inverter Parameters via App

SolarGo app is a mobile application that communicates with the inverter via Bluetooth module, WIFi module or inverter. Commonly used functions are as follows:

1. Check the operating data, software version, alarms of the inverter, etc.
2. Set grid parameters and communication parameters of the inverter.
3. Equipment maintenance.

For more details, refer to the SolarGo App User Manual. Get the user manual from the official site or by scanning the QR code below.

SolarGo App

SolarGo App User Manual

8.2 Monitoring via SEMS Portal

SEMS Portal is a monitoring platform that can communicate with devices via WiFi, LAN or 4G. Commonly used functions are as follows:

1. Managing Organizations or user information
2. Adding and monitoring information of power station
3. Equipment maintenance.

For more details, refer to the SEMS User Manual. Get the user manual from the official site or by scanning the QR code below.

9 System Maintenance

9.1 Power Off the Inverter

⚠DANGER

- Power off the inverter before operations and maintenance. Otherwise, the inverter may be damaged or electric shocks may occur.
- After the inverter is powered off, its internal components require a certain amount of time to discharge. Please wait until the device is fully discharged in accordance with the time requirement indicated on the label.

Step 1: Turn off the AC switch between the inverter and the utility grid.
Step 2: Turn off the DC switch of the inverter.

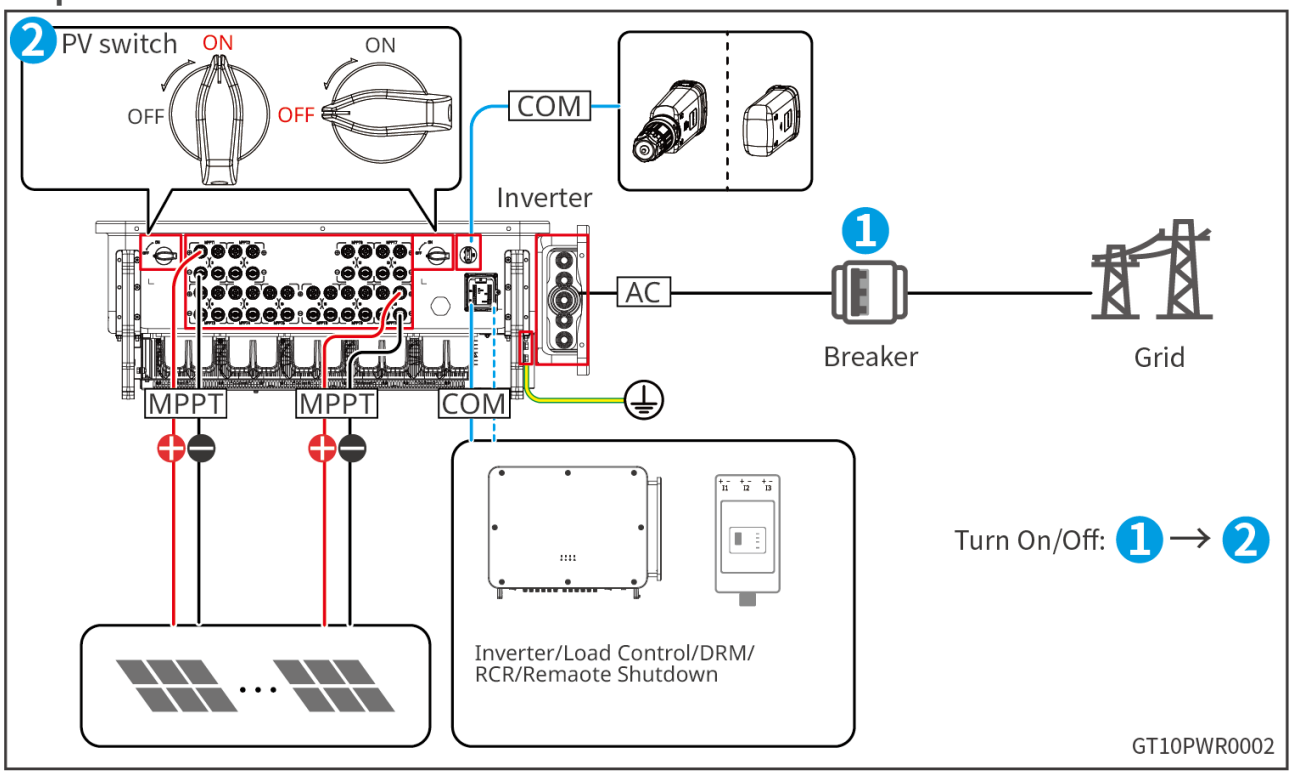

9.2 Removing the Inverter

⚠WARNING

- Make sure that the inverter is powered off.
- Wear proper PPE before any operations.

Step 1: Disconnect all the cables, including DC cables, AC cables, communication cables, the communication modules, and PE cables.
Step 2: Handle or hoist the inverter to take it down from the wall or the mounting plate.
Step 3:Remove the mounting plate.
Step 4:Store the inverter properly. If the inverter needs to be used later, ensure that the storage conditions meet the requirements.

9.3 Disposing of the Inverter

If the inverter cannot work anymore, dispose of it according to the local disposal requirements for electrical equipment waste. Do not dispose of it as household waste.

9.4 Troubleshooting

Perform troubleshooting according to the following methods. Contact the after-sales service if these methods do not work.
When contacting the after-sales service center, please collect the following information to facilitate the quick resolution of the problem.

1. Inverter information, such as: serial number, software version, installation date, fault time, fault frequency, etc.
2. Installation environment, including weather conditions, whether the PV modules are sheltered or shadowed, etc. It is recommended to provide some photos and videos to assist in analyzing the problem.
3. Grid situation

No.	Fault	Reasons	Solutions

1	Utility Grid Power Off	1. Utility Grid Power Fails. 2. The AC circuit or the AC breaker is disconnected.	1. The alarm automatically disappears after the grid power supply is restored. 2. Check if the AC circuit or the AC breaker is disconnected.
2	Grid Overvoltage Protection	The grid voltage exceeds the permissible range, or the duration of high voltage exceeds the requirement of HVRT.	1. If occurs occasionally, it may be caused a short term grid abnormality. The inverter will recover automatically after the grid is normal. 2. If it occurs frequently, please check whether the grid voltage is within the allowed range. • If the grid voltage exceeds the allowed range, please contact local power operator. • If the grid voltage is within the allowable range, please modify the grid voltage with the consent of the local power operator. 3. Check whether the AC breaker and the output cables are connected securely and correctly if the problem persists.

3	Grid Rapid Overvoltage Protection	The fault triggered by abnormal or ultrahigh grid voltage	1. If occurs occasionally, it may be caused a short term grid abnormality. The inverter will recover automatically after the grid is normal. 2. If it occurs frequently, please check whether the grid voltage is within the allowed range. • If the grid voltage exceeds the allowed range, please contact local power operator. • If the grid voltage is within the allowable range, please modify the grid voltage with the consent of the local power operator. 3. Check whether the AC breaker and the output cables are connected securely and correctly if the problem persists.
4	Grid Undervoltage Protection	The grid voltage is lower than the permissible range, or the duration of low voltage exceeds the requirement of LVRT.	1. If occurs occasionally, it may be caused a short term grid abnormality. The inverter will recover automatically after the grid is normal. 2. If it occurs frequently, please check whether the grid voltage is within the allowed range. • If the grid voltage exceeds the allowed range, please contact local power operator. • If the grid voltage is within the allowable range, please modify the grid voltage with the consent of the local power operator. 3. Check whether the AC breaker and the output cables are connected securely and correctly if the problem persists.

5	10min Overvoltage Protection	The sliding average value of the grid voltage exceeds the range specified in safety regulations within 10 minutes.	1. If occurs occasionally, it may be caused a short term grid abnormality. The inverter will recover automatically after the grid is normal. 2. Check whether the grid voltage has been operating at a relatively high level for a long time. If the problem occurs frequently, check whether the grid voltage is within the permissible range. • If the grid voltage exceeds the allowed range, please contact local power operator. • If the grid voltage is within the allowable range, please modify the 10min overvoltage protection value with the consent of the local power operator.
6	Grid Overfrequency Protection	Utility grid abnormality. The actual grid frequency exceeds the requirement of the local grid standard.	1. If occurs occasionally, it may be caused a short term grid abnormality. The inverter will recover automatically after the grid is normal. 2. If it occurs frequently, please check whether the grid frequency is within the allowed range. • If no, please contact local power operator. • If the grid voltage is within the allowable range, please modify the Grid Underfrequency protection value with the consent of the local power operator.

7	Grid Underfrequency Protection	Utility grid exception. The actual grid frequency is lower than the requirement of the local grid standard.	1. If occurs occasionally, it may be caused a short term grid abnormity. The inverter will recover automatically after the grid is normal. The inverter will recover automatically after the grid is normal. 2. If it occurs frequently, please check whether the grid frequency is within the allowed range. • If no, please contact local power operator. • If the grid voltage is within the allowable range, please modify the Grid Underfrequency protection value with the consent of the local power operator.
8	LVRT Undervoltage Fault	Utility grid abnormality. The duration of the utility grid abnormality exceeds the set time of LVRT.	1. If occurs occasionally, it may be caused a short term grid abnormity. The inverter will recover automatically after the grid is normal. The inverter will recover automatically after the grid is normal. 2. If it occurs frequently, please check whether the grid voltage is within the allowed range. If no, please contact local power operator. If the grid voltage is within the allowable range, please contact the dealer or the after-sales service.
9	HVRT Overvoltage Fault	Utility grid abnormality. The duration of the utility grid abnormality exceeds the set time of HVRT.	
10	30mAGfci Protection	The input insulation resistance to the ground becomes low when the inverter is working.	
11	60mAGfci Protection		
12	150mAGfci Protection		

13	Gfci Slow Change Protection		1. If occurs occasionally, it may be caused by a external cable abnormality. The inverter will recover automatically after the problem is solved, no manual intervention is required. 2. If it occurs frequently or fails to recover for a long time, please check whether the insulation resistance of the PV string to ground is too low.
14	DCI Protection L1 Protection	The DC component of the output current exceeds the safety range or default range.	1. If the abnormality is caused by an external fault (such as grid abnormality, frequency abnormality, etc.), the inverter will automatically resume normal operation after the fault is eliminated, and no manual intervention is required. 2. If the alarm occurs frequently and affects the normal power generation of the power station, please contact the dealer or the after-sales service.
15	DCI Protection L2 Protection		
16	Low Insulation Resistance	1. The PV string is short-circuited to PE. 2. The PV string installation environment remains humid for a long time, and the cables have poor insulation to the ground.	1. Check the resistance of the PV string to the ground. If there is a short circuit phenomenon, please check the short circuit point and rectify it. 2. Check whether the PE cable is connected correctly. 3. If it is confirmed that the resistance is indeed lower than the default value in cloudy and rainy days, please reset the "insulation resistance protection value".
17	Low Insulation Resistance		

18	System Grounding Abnormality	1. The PE cable of the inverter is not connected. 2. When the output of the PV string is grounded, there is no isolation transformer connected to the output side of the inverter.	1. Please check whether the PE cable of the inverter is properly connected. 2. If the output of the PV string is grounded, please confirm whether an isolation transformer is connected to the output side of the inverter.
19	L-PE Short Circuit	Low resistance or short circuit between the output phase cable and PE.	Check the resistance between the output phase cable and PE, locate the position with low resistance, and repair it.
20	Anti Reverse Power Failure	Abnormal Fluctuation of Load	1. If the abnormality is caused by an external fault, the inverter will automatically resume normal operation after the fault is eliminated, and no manual intervention is required. 2. If this alarm occurs frequently and affects the normal power generation of the power station, please contact the dealer or after-sales service center.
21	Internal Comm Loss	1. Chip has not be powered on 2. Chip Program Version Fault	Disconnect the AC output switch and DC input switch, then connect them 5 minutes later. Contact the dealer or the after-sales service if the problem persists.

22	AC HCT Check Abnormality	The sampling of the AC HCT is abnormal.	Disconnect the AC output switch and DC input switch, then connect them 5 minutes later. Contact the dealer or the after-sales service if the problem persists.
23	GFCI HCT Check Abnormality	The sampling of the GFCI HCT is abnormal.	Disconnect the AC output switch and DC input switch, then connect them 5 minutes later. Contact the dealer or the after-sales service if the problem persists.
24	Relay Check Abnormality	1. The relay is abnormal (short-circuited) 2. The control circuit is abnormal 3. AC Side Wiring Abnormality (possible loose connection or short circuit)	Disconnect the AC output switch and DC input switch, then connect them 5 minutes later. Contact the dealer or the after-sales service if the problem persists.
25	Internal Fan Abnormality	1. The fan power supply is abnormal. 2. Mechanical Fault (locked rotor) 3. The fan is aging and damaged.	Disconnect the AC output switch and DC input switch, then connect them 5 minutes later. Contact the dealer or the after-sales service if the problem persists.
26	External Fan Abnormality		
27	Flash Read/Write Fault	The internal Flash storage is abnormal	Disconnect the AC output switch and DC input switch, then connect them 5 minutes later. Contact the dealer or the after-sales service if the problem persists.

28	DC Arc Fault	1. The DC terminal is not firmly connected. 2. The DC wiring is damaged.	Check whether the string connection cables are in normal condition, properly connected, and in good contact.
29	AFCI Self-test Fault	AFCI detection equipment is abnormal.	Disconnect the AC output switch and DC input switch, then connect them 5 minutes later. Contact the dealer or the after-sales service if the problem persists.
30	INV Block Over-temperature Mode	1. The inverter is installed in a place with poor ventilation. 2. The ambient temperature is too high. 3. Internal Fan Abnormal Operation.	1. Check whether the installation location of the inverter has good ventilation and whether the ambient temperature exceeds the maximum allowable ambient temperature range. 2. If there is poor ventilation or the ambient temperature is too high, please improve its ventilation and heat dissipation conditions. 3. If both the ventilation and the ambient temperature are proper, please contact the dealer or after-sales service.
31	Cavity Overtemperature		
32	bst Module Overtemperature		
33	The cavity temperature is too low.	The ambient temperature is too low.	1. Check if the ambient temperature is too low. Wait for the temperature to rise to the machine's operating temperature range, then verify if the machine operates normally. 2. Contact the dealer or after-sales service if both the ventilation and the ambient temperature are proper
34	1.5V Ref Abnormality	Reference Circuit Fault	

35	0.3V Ref Abnormality	Reference Circuit Fault	Disconnect the AC output switch and DC input switch, then connect them 5 minutes later. Contact the dealer or the after-sales service if the problem persists.
36	0.8V Ref Abnormality	Reference Circuit Fault	
37	BUS Overvoltage	1. The PV voltage is too high. 2. Inverter BUS Voltage Sampling Abnormality 3. The isolation of the transformer of the inverter is poor, so two inverters influence each other when connected to the grid. One of the inverters reports DC overvoltage.	Disconnect the AC output switch and DC input switch, then connect them 5 minutes later. Contact the dealer or the after-sales service if the problem persists.
38	P-BUS Overvoltage		
39	N-BUS Overvoltage		
40	PV Input Overvoltage	The PV array configuration is not correct. Too many PV panels are connected in series in the PV string.	Check the series configuration of the corresponding PV array strings. Ensure that the open-circuit voltage of the strings does not exceed the maximum operating voltage of the inverter.
41	PV Continuous Hardware Overcurrent	1. The PV configuration is not proper. 2. The hardware is damaged.	Disconnect the AC output switch and DC input switch, then connect them 5 minutes later. Contact the dealer or the after-sales service if the problem persists.

42	PV Continuous Software Overcurrent	1. The PV configuration is not proper. 2. The hardware is damaged.	Disconnect the AC output switch and DC input switch, then connect them 5 minutes later. Contact the dealer or the after-sales service if the problem persists.
43	String Reversed (String 1~String 20)	PV String Reversed	Check whether PV strings are connected reversely.
44	The PV voltage is low	Sun light is weak or changing abnormally.	1. If it occurs occasionally, the reason might be abnormal sun light. The inverter will recover automatically without manual intervention. 2. If it occurs frequently, please contact the dealer or after-sales service center.
45	The BUS voltage is low	Sun light is weak or changing abnormally.	1. If it occurs occasionally, the reason might be abnormal sun light. The inverter will recover automatically without manual intervention. 2. If it occurs frequently, please contact the dealer or after-sales service center.
46	BUS Soft Start Failure	Boost Driver Circuit Abnormality	Disconnect the AC output switch and DC input switch, then connect them 5 minutes later. Contact the dealer or the after-sales service if the problem persists.

47	BUS Voltage Imbalance	1. The inverter sampling circuit is abnormal. 2. Abnormal Hardware.	Disconnect the AC output switch and DC input switch, then connect them 5 minutes later. Contact the dealer or the after-sales service if the problem persists.
48	Gird Phase Lock Failure	Grid Frequency Instability	Disconnect the AC output switch and DC input switch, then connect them 5 minutes later. Contact the dealer or the after-sales service if the problem persists.
49	Inverter Continuous Overcurrent	A short-term sudden change in the power grid or load causes control overcurrent	If it occurs occasionally, no action is required; If it occurs frequently, please contact the dealer or after-sales service center.
50	Inverter Software Overcurrent		
51	R Phase Inverter Hardware Overcurrent		
52	S Phase Inverter Hardware Overcurrent		
53	T Phase Inverter Hardware Overcurrent		

54	PV Single Hardware Overcurre nt	Sun light is weak or changing abnormally.	Disconnect the AC output switch and DC input switch, then connect them 5 minutes later. Contact the dealer or the after-sales service if the problem persists.
55	PV Single Software Overcurre nt		
56	PV HCT Fault	Disconnect the AC output switch and DC input switch, then connect them 5 minutes later. Contact the dealer or the after-sales service if the problem persists.	Turn off the AC output side switch and DC input side switch. After 5 minutes, turn on the AC output side switch and DC input side switch. If the fault still exists, please contact the dealer or our company's customer service center.
57	PV String Lost (String 1~String 20)	String Fuse Disconnected (if equipped)	Check if the fuse is disconnected
58	String Terminals Overtempe rature (String 1~String 20)	Terminal overtemperature is detected.	1. Check if the terminals are loose or have poor contact. 2. If the terminals are in good contact but the alarm occurs frequently, please contact the dealer or GoodWe customer service center.
59	AC Terminal Overtempe rature		

9.5 Routine Maintenance

⚠DANGER
Power off the inverter before operations and maintenance. Otherwise, the inverter may be damaged or electric shocks may occur.

Maintenance Content	Maintenance Method	Maintenance Cycle
System Cleaning	Check whether the heat sinks and air inlets/outlets are free of foreign objects and dust.	Once every 6 months to once a year
Fan	Check the fan for proper working status, low noise, and intact appearance.	Once a year
DC Switch	Turn the DC switch on and off ten consecutive times to make sure that it is working properly.	Once a year
Electrical Connections	Check whether electrical connections are loose, and whether the cable appearance is damaged or has exposed copper.	Once every 6 months to once a year
Sealing	Check whether the sealing of the equipment's cable entry holes meets the requirements; if there are excessively large gaps or unblocked areas, re-seal them.	Once a year

Fan Maintenance

For fan maintenance, refer to the specific steps below:

The GT series inverter is equipped with an external fan module, which is inserted into the back of the inverter from the left side. This fan requires cleaning with a vacuum cleaner annually. For thorough cleaning, pull out the fan from the unit first.

1. Turn off the AC switch between the inverter and the power grid, and turn off the DC switch of the inverter.
2. Wait until the residual voltage is completely discharged (as required by the label) and the fan stops running.
3. Clean the fan.

- Remove the screws with a screwdriver and pull out the fan;
- Pull out the entire external fan module, do not pull out individual fans.

4. Use a soft bristle brush, cloth, or vacuum cleaner.
5. After cleaning, reassemble the fan and tighten the screws securely.

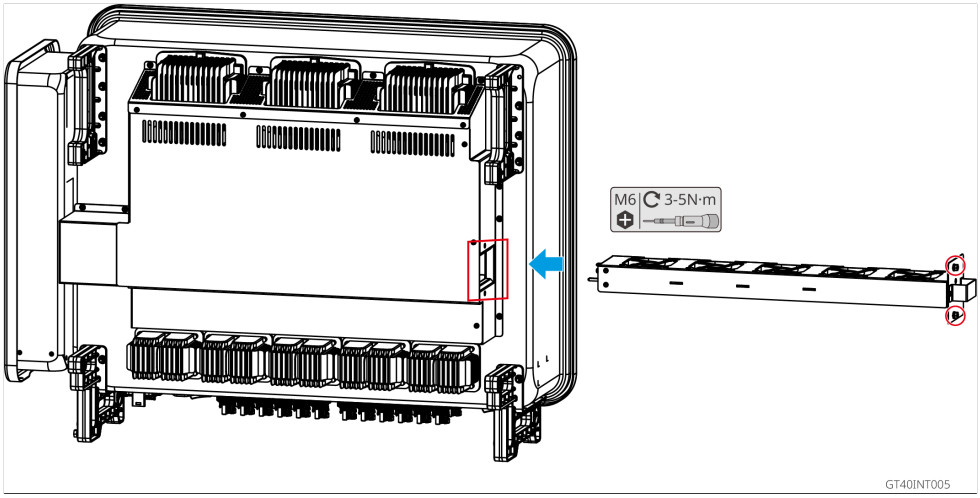
M6
3-5N·m
GT40INT005

10 Technical Parameters

Technical Data	GW150K-GT-G10	GW100K-GT-L-G10
Input		
Max. Input Power (kW)	225	180
Max. Input Voltage (V)	1100*1	900
MPPT Operating Voltage Range (V)*2	180~1000	180~900
MPPT Voltage Range at Nominal Power (V)	500@850V@380V / 400/ 415Vac	330~650
	600~ 850V @480Vac	
Start-up Voltage (V)	200	200
Nominal Input Voltage (V)	600V@380/400/415Vac, 720V @480Vac	370
Max. Input Currt per MPPT (A)	42	42
Max. Short Circuit Currt per MPPT (A)	52.5	52.5
Max. Backfeed Currt to the Array (A)	0	0
Number of MPP Trackers	10	10
Number of Strings per MPPT	2	2
Output		
Nominal Output Power (kW)	150	100*3

Nominal Output Apparent Power (kVA)	150	100*3
Max. AC Active Power (kW)	165	100*3
Max. AC Appart Power (kVA)	165	100*3
Nominal Power at 40℃ (kW)	150	100*3
Max. Power at 40℃ (Including AC Overload) (kW)	150	100*3
Nominal Output Voltage (V)	220/380, 230/400, 240/415,277/480V, 3L/N/PE or 3L/PE	127/220V, 133/230V, 3L/N/PE or 3L/PE
Output Voltage Range (V)	323~528	176~253
Nominal AC Grid Frequcy (Hz)	50/60	50/60
AC Grid Frequcy Range (Hz)	45~55/ 55- 65	45~55/55~65
Max. Output Currt (A)	250.7A @380Vac	251
	238.2A @400Vac	
	229.6A @415Vac	
	198.5A @480Vac	
Max. Output Fault Currt (Peak and Duration) (A)	460: 5μs	460: 5μs
Inrush Currt (Peak and Duration) (A)	120: 1μs	120: 1μs

Nominal Output Currt (A)	227.9A @380Vac	251
	216.5A @400Vac	
	208.7A @415Vac	
	180.4A @480Vac	
Power Factor	~1 (Adjustable from 0.8 leading to 0.8 lagging)	~1 (Adjustable from 0.8 leading to 0.8 lagging)
Max. Total Harmonic Distortion	<3%	<3%
Maximum Output Overcurrt Protection (A)	460	460
Efficicy		
Max. Efficiency	99.0%	98.8%
European Efficicy	98.5%	98.3%
CEC Efficicy	98.5%	98.3%
Protection		
PV String Currt Monitoring	Integrated	Integrated
PV Insulation Resistance Detection	Integrated	Integrated
Residual Currt Monitoring	Integrated	Integrated
PV Reverse Polarity Protection	Integrated	Integrated
Anti-islanding Protection	Integrated	Integrated
AC Overcurrt Protection	Integrated	Integrated
AC Short Circuit Protection	Integrated	Integrated

AC Overvoltage Protection	Integrated	Integrated
DC Switch	Integrated	Integrated
DC Surge Protection	Type II (Type I+II Optional)	Type II (Type I+II Optional)
AC Surge Protection	Type II	Type II
AFCI*4	Optional	Optional
Emergcy Power Off	Optional	/
Rapid Shutdown	Optional	Optional
Remote Shutdown*5	Optional	Optional
PID Recovery	Optional	Optional
Reactive Power Compsation at Night	Optional	/
Power Supply at Night	Optional	Optional
I-V Curve Scan	Optional	Optional
Geral Data		
Operating Temperature Range (℃)	-30~ +60	-30~ +60
Storage Temperature (℃)	-40~ +70	-40~ +70
Relative Humidity	0~100%	0~100%
Max. Operating Altitude (m)	4000	4000
Cooling Method	Smart Fan Cooling	Smart Fan Cooling
User Interface	LED, LCD (Optional), APP	LED, LCD (Optional), APP

Communication	RS485, WiFi+LAN+ Bluetooth , 4G+ Bluetooth or PLC(Optional)	RS485, WiFi+LAN+ Bluet ooth, 4G+ Bluetooth or PLC(Optional)
Communication Protocols	Modbus-RTU (SunSpec Compliant), Modbus-TCP	Modbus-RTU (SunSpec Compliant), Modbus-TCP
Weight (kg)	<=99	<=99
Dimsion (W×H×D mm)	995×758×358	995×758×358
Noise Emission (dB)	<65	<65
Topology	Non-isolated	Non-isolated
Self-consumption at Night (W)	<2	<2
Ingress Protection Rating	IP66	IP66
Anti-corrosion Class	C4, C5 (Optional)	C4, C5 (Optional)
DC Connector	MC4 (4~ 6mm^2)	MC4 (4~ 6mm^2)
AC Connector	OT/DT terminal (Max. 400 mm^2)	OT/DT terminal (Max. 400 mm^2)
Environmtal Category	4K4H	4K4H
Pollution Degree	III	III
Overvoltage Category	DCII / ACIII	DCII / ACIII
Protective Class	I	I
The Decisive Voltage Class (DVC)	PV: C	PV: C
	AC: C	AC: C
	com: A	com: A

Active Anti-islanding Method	AFDPF + AQDPF	AFDPF + AQDPF
Country of Manufacture	China	China

11 Explanation of Terms

Overvoltage Category Definition:
Overvoltage Category I: connects to equipment connected to a circuit where measures have been taken to reduce transient overvoltage to a low level;
Overvoltage Category II: energy-consuming equipment powered by fixed power distribution devices. Such equipments include appliances, portable tools, and other household and similar loads. If there are special requirements for the reliability and applicability of such equipment, Voltage Category III shall be adopted;
Category III: fixed downstream equipment, including the main distribution board. Such equipments include switchgear in fixed power distribution devices and industrial equipment permanently connected to fixed power distribution devices;
Category IV: applied to the upstream equipment in the power supply of the distribution device, including measuring instruments and upstream over-current protection devices.

Humid Scenarios Category Definition:

Environment Parameters	Level		
	3K3	4K2	4K4H
Temperature Range	0~+40℃	-33~+40℃	-33~+40℃
Humid Range	5%~ 85%	15%~ 100%	4%~ 100%

Overvoltage Category Definition:
Outdoor Inverter: The ambient air temperature range is -25 to +60℃, and it is suitable for environments with pollution degree 3;
Indoor Type II Inverter: The ambient air temperature range is -25 to +40℃, and it is suitable for environments with pollution degree 3;
Indoor Type I Inverter: The ambient air temperature range is 0 to +40℃, and it is suitable for environments with pollution degree 2.

Pollution Class Category Definition:
Pollution Degree 1: No pollution or only dry non-conductive pollution;
Pollution Degree 2: In general, there is only non-conductive pollution, but the transient conductive pollution caused by occasional condensation must be taken into account;
Pollution Degree 3: There is conductive pollution, or the non-conductive pollution becomes conductive pollution due to condensation;
Pollution Degree 4: Persistent conductive pollution, such as pollution caused by conductive dust or rain and snow.

12 Obtaining of Relevant Manuals

Name of the Document	Official Web Link
Quick Installation Guide for 4G Kit - CN - G20 or 4G Kit - CN - G21	GW_4G Communication Quick Installation Guide)
SEC3000 User Manual	GW SEC3000 Series User Manual
EzLogger3000C User Manual	EzLogger3000C User Manual
GMK330＆GMK360＆GM330 Quick Installation Guide	Quick Installation Guide for GW_GMK330 GMK360 GM330

13 Contact Details

GoodWe Technologies Co., Ltd.
No. 90 Zijin Rd., New District, Suzhou, China
400- 998- 1212
www.goodwe.com
service@goodwe.com